Fully Automatic Bandsawing with Conversational Set-Up, Active Hydraulic Cutting Force Control, True Swivel Head for Miter Angles

Parts Manual

MODEL

1316S - Auto

Fully Automatic Bandsaw with Miter Head

Built better to work stronger and last longer

Shown with Optional Bundle Clamp System

REV 180529

Wellsaw®
Made In The USA
Quality Metal Cutting Bandsaws
2829 N. Burdick St. Kalamazoo, MI 49004
Phone: 269-345-1132 Fax: 269-345-0095
www.wellsaw.com

Table of Contents

1316S-Auto Specifications....2
1316S-Auto Components....2
Safety Warning....3
Machine Overview....5
Frame Assembly....6
Frame Lift Cylinder....8
Bed Assembly....9
Table Assembly....10
Base Assembly....12
Blade Guide Assembly....14
Cutting Force Detail....16
Coolant System....17
Blade Tension Mechanism....18
Blade Brush Assembly....20
Valve & Manifold Detail....22
Hydraulic Motor & Pump Assembly....23
Filter Assembly....23
Motor & Gearbox....24
Holdown Clamps....25
Control Station....26
Hycraulic/Pneumatic Schematic....27
Electrical Controls , Schematics....28
Speed & Feed Chart....34

Specifications

Capacity @ 0° (90°) @ 45° @ 60°	Round | Rectangular 13" | 13"H x 16"W 12" | 13"H x 12"W 7-1/2" | 8-1/2"H x 7-1/2"W
Blade Size	1" x .035" x 12'6" (150")
Blade Speeds	Infinitely Variable 60-420 SFPM
Blade Guides	Carbide Guides with Rollers
Blade Tension	Double Die Spring with Indicator
Electrical Options	230/3 (See Options for Other Voltages)
Coolant System	Tank Capacity 8 Gallons Submersible Pump 115V/.6 Amp/3 GPM
Vise Control	Quick Positioning/Air Powered
Feed Rate Control	Variable Positive Hydraulic with Sawing Force Control
Cutting Force Control	30-120 Lbs.
Jobs Storage	99
Band Wheels	15" Diameter Cast Iron
Barfeed Projection	25" Unlimited Indexes
Barfeed Accuracy	+/- .002"
Barfeed Remnant	10"
Barfeed Length	5'
Weight Capacity	3,000 Lbs.
Bed Height	35"
Floor Area	90"W x 120"L
Shipping Weight	3,100 Lbs.

1316S-Auto Components

- Square D® Programmable Machine Controller with Membrane Keypad and LCD display
- Square D® Vector Type Frequency Motor Controller
- Baldor® 5hp TEFC Blade Drive
- Baldor® 3/4hp Hydraulic Motor
- Textron/Cone Drive® Double Enveloping Gearbox
- Vickers® Hydraulic Valves
- Wellsaw Tiger-Tooth® Bi-Metal Blade
- Active Hydraulic Cutting Force Control
- Encoder Type Barfeed
- Blade Break/Stall Proximity Switch
- Working Light with Transformer
- Unitized Base Design (Saw and Barfeed) with Integral Fork Pockets
- Out of Stock Shutdown
- Self Centering Shuttle Carriage with Anti-Climbing Vises
- Discharge Table & Shute
- Spring-Loaded Carbide Guides with Rollers
- 8 Gallon Flood Coolants System with Sample/Start-Up Coolant
- Full Surround Chip Pan
- Powered Blade Brush
- 110 Volts at Controls
- Overload and Undervoltage Protection
- Precision Ground Beds and Discharge Table
- Auto Shut-Off at End of Cut
- OSHA Blade Guarding
- Low Air Pressure Safety Switch
- NFPA Electrics (with Fused Disconnect)
- Flush Hose

Key Features

Fully Automatic Bandsawing | Conversational Set-Up | Encoder Type Barfeed | Quick Set-Up and Multiple Job Programing | Automatic Kerf Compensation | Machine Diagnostics | Hydraulic Cutting Force Control System

Available Factory Options

Overhead/Bundle Clamping | Transformer for 460 Volt Operation | Chip Conveyor | Variable Vise Pressure | Laser Line Pointer | 5' and 10' Non-Powered Conveyors | Oil Injection Type Lubrication Systems | Hour Meter

WARNING

Misuse of this machine can cause serious injury. For safety, machine must be set up, used and serviced properly. Read, understand and follow instructions in the operator's and parts manual.

When setting up machine:

- Always avoid using machine in damp or poorly lighted work areas.
- Always be sure machine is securely anchored to the floor.
- Always keep machine guards in place.
- Always put start switch in "OFF" position before plugging in machine.

When using machine:

- Never operate with machine guards missing.
- Always wear safety glasses with side shields (See SI Z87.1).
- Never wear loose clothing or jewelry.
- Never overreach - you may slip and fall into the machine.
- Never leave machine running while away from it.
- Always shut off the machine when not in use.

When servicing the machine:

- Always unplug machine from electrical power while servicing.
- Always follow instructions in operators and parts manual when changing accessory tools or parts.
- Never modify the machine.

Read and follow these simple rules for best results and full benefits from your machine. Used properly, Wellsaw's machinery is among the best in design and safety. However, any machine used improperly can be rendered inefficient and unsafe. It is absolutely mandatory that those who use our products be properly trained in how to use them correctly. They should read and understand the Operators and Parts manual as well as all labels affixed to the machine. Failure in following all of these warnings can cause serious injuries.

Machinery General Safety Warnings

1. Always wear protective eye wear when operating machinery. Eye wear shall be impact resistant, protective safety glasses with side shields which comply with ANSI Z87.1 specifications. Use of eye wear which does not comply with ANSI Z87.1 specifications could result in severe injury from breakage of eye protection.
2. Wear proper apparel. No loose clothing or jewelry which can get caught in moving parts. Rubber soled footwear is recommended for best footing.
3. Do not overreach. Failure to maintain proper working position can cause you to fall into the machine or cause your clothing to get caught pulling you into the machine.
4. Keep guards in place and in proper working order. Do not operate the machine with guards removed.
5. Avoid dangerous working environments. Do not use stationary machine tools in wet or damp locations. Keep work areas clean and well lit. Special electrics should be used when working on flammable materials.
6. Avoid accidental starts by being sure the start switch is "OFF" before plugging in the machine.
7. Never leave the machine running while unattended. Machine shall be shut off whenever it is not in operation.
8. Disconnect electrical power before servicing. Whenever changing accessories or general maintenance is done on the machine, electrical power to the machine must be dis connected before work is done.
9. Maintain all machine tools with care. Follow all maintenance instructions for lubricating and the changing of accessories. No attempt shall be made to modify or have make shift repairs done to the machine. This not only voids the warranty but also renders the machine unsafe.
10. Secure work. Use clamps or a vise to hold work when practical. It is safer than using your hands and it frees both hands to operate the machine.
11. Never brush away chips while the machine is in opertion.
12. Keep work area clean. Cluttered areas invite accidents.
13. Remove adjusting keys and wrenches before turning the machine back on.
14 Use the right tool. Don't force a tool or attachment to do a job it was not designed for.
15. Use only recommended accessories and follow manufacturers instructions pertaining to them.
16. Keep hands in sight and clear of all moving parts and cutting surfaces.
17. All visitors should be kept at a safe distance from the work area. Make workshop completely safe by using padlocks, master switches, or by removing starter keys.
18. Know the tool you are using - its application, limitations, and potential hazards.

19. Some dust created by power sanding, sawing, grinding, drilling and other construction activities contains chemicals known to cause cancer, birth defects or other repro ductive harm. Some examples of these chemicals are:

    - Lead from lead based paint
    - Crystalline silica from bricks and cement and other masonry products, and
    - Arsenic and chromium from chemically treated lumber

20. Your risk from those exposures varies, depending on how often you do this type of work. To reduce your exposure to these chemicals: work in a well ventilated area, and work with approved safety equipment, such as those dust masks that are specifically designed to filter out microscopic particles.

General Electrical Cautions:
This saw should be grounded in accordance with the National Electrical Code and local codes and ordinances. This work should be done by a qualified electrician. The saw should be grounded to protect the user from electrical shock.

Wire sizes: Caution: for circuits which are far away from the electrical service box, the wire size must be increased in order to deliver ample voltage to the motor. To minimize power losses and to prevent motor overheating and burnout, the use of wire sizes for branch circuits or electrical extension cords according to the following table is recommended:

Conductor Length	AWG (American wire gauge) number	
	240 volt lines	120 volt lines
0-50 feet 50-100 feet Over 100 feet	No. 14 No. 14 No. 12	No. 14 No. 12 No. 8

Safety Instructions for Sawing Machines

1. Always wear leather gloves when handling a saw blade. The operator shall not wear gloves when operating the machine.
2. All doors shall be closed, all panels replaced, and all other safety guards in place prior to the machine being started or operated.
3. Be sure that the blade is not in contact with the workpiece when the motor is started. The motor shall be started and you should allow the saw to come to full speed before bringing the workpiece into the saw blade.
4. Keep hands away from the blade area. **See figure A.**
5. Remove any cut off piece carefully while keeping your hands free from the blade area.
6. Saw must be stopped and electrical supply must be cut off before any blade replacement or adjustment of blade support mechanism is done, or before any attempt is made to change the drive belts or before any periodic service or maintenance is performed on the saw.
7. Remove all loose items and any unnecessary work pieces from the area before starting machine.
8. Bring adjustable saw guides and guards as close as possible to the work piece.
9. Always wear protective eye wear when operating, servic ing or adjusting machinery. Eye wear shall be impact resistant, protective safety glasses with side shields complying with ANSI Z87.1 specifications. Use of eye wear which does not comply with ANSI Z87.1 specifications could result in severe injury from breakage of eye protection. **See figure B**.
10. Non-slip footwear and safety shoes are recommended. See **Figure C**.
11. Wear ear protectors (plugs or muffs) during extended periods of operation. **See figure D**.
12. The workpiece, or part being sawed, must be securely clamped before the saw blade enters it.
13. Remove cut off pieces carefully, keeping hands away from saw blade.
14. Saw must be stopped and electrical supply cut off or machine unplugged before reaching into cutting area.
15. Avoid contact with coolant, especially guarding your eyes.

Figure A

Figure B

Figure C

Figure D

Machine Overview

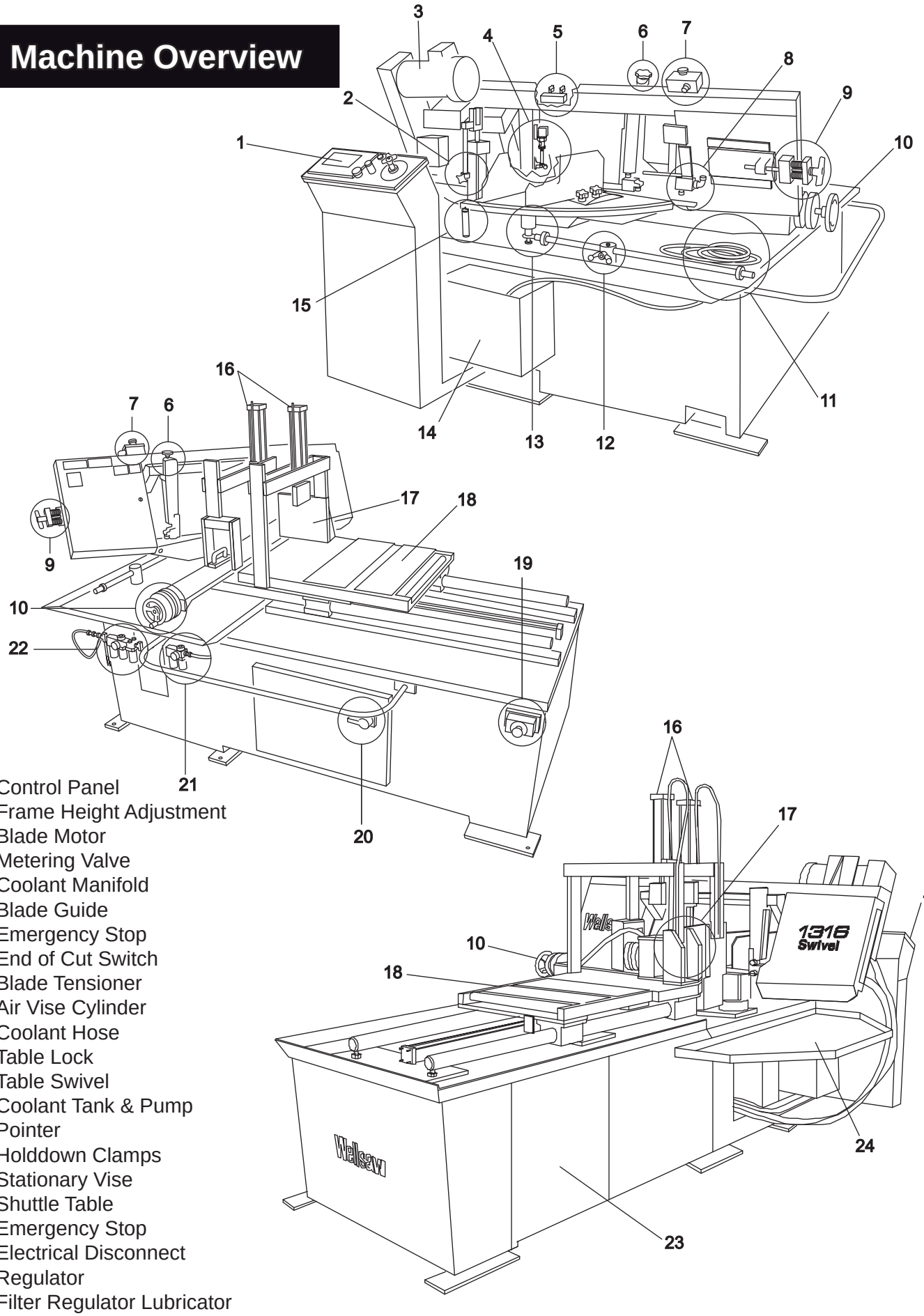

1 Control Panel
2 Frame Height Adjustment
3 Blade Motor
4 Metering Valve
5 Coolant Manifold
6 Blade Guide
7 Emergency Stop
8 End of Cut Switch
9 Blade Tensioner
10 Air Vise Cylinder
11 Coolant Hose
12 Table Lock
13 Table Swivel
14 Coolant Tank & Pump
15 Pointer
16 Holddown Clamps
17 Stationary Vise
18 Shuttle Table
19 Emergency Stop
20 Electrical Disconnect
21 Regulator
22 Filter Regulator Lubricator
23 Hydraulics (inside)
24 Chip Pan

Frame Assembly

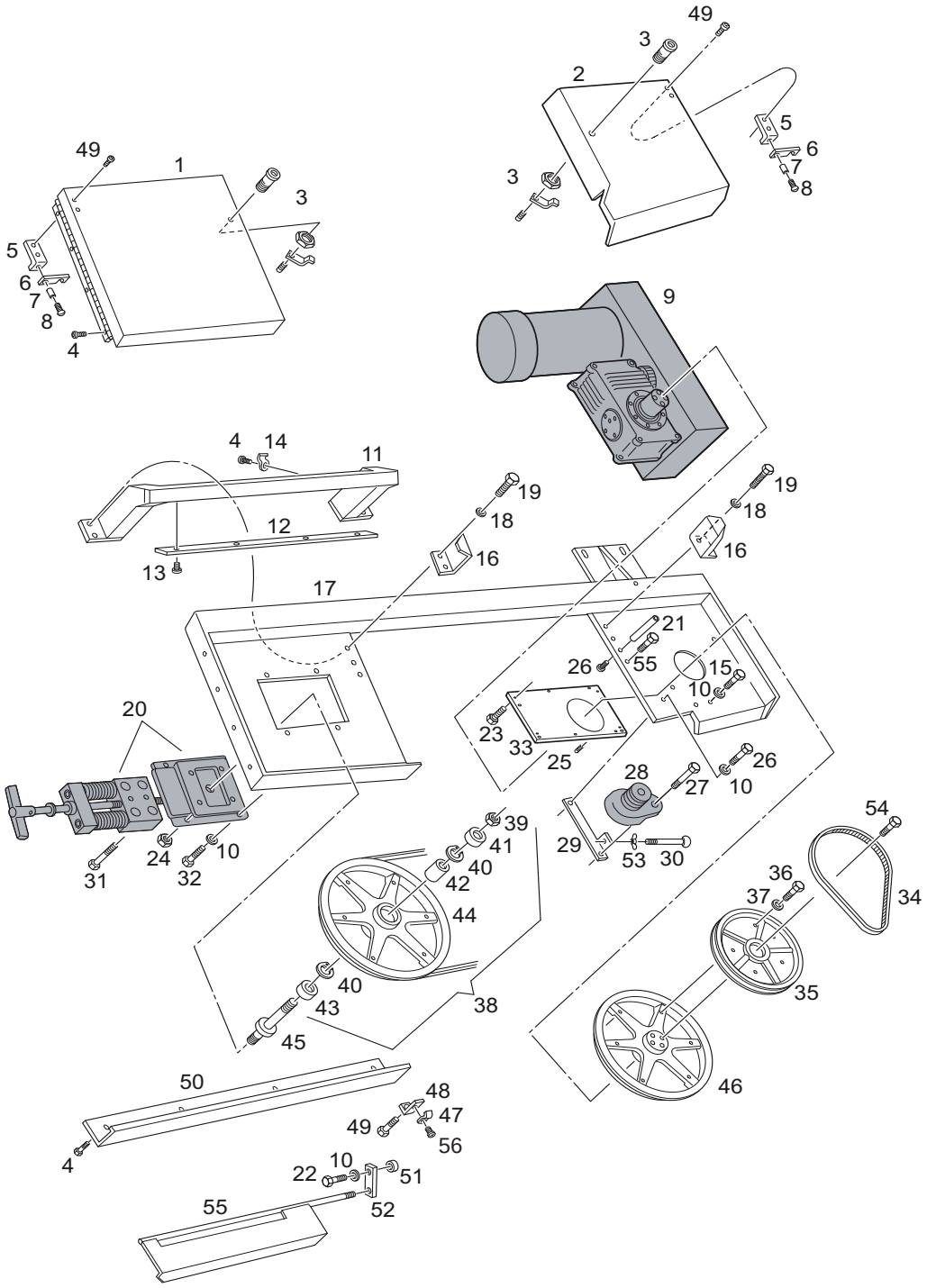

Frame Assembly

1	150146	Idle Wheel Guard
2	150147	Drive Wheel Guard
3	100135-002	1/4 Turn Fastener w/cam
4	100013-010	Machine Screw, BH 1/4-20 x 1/4
5	150095	Door Catch Mtg Block
6	150096	Door Catch
7	150182	Door Catch Sleeve
8	100013-009	Machine Screw, BH 10-32 x 1/2
9		**Motor & Gear Box Assembly (page 24)**
10	100025-002	Lock Washer, 5/16
11	150280	Guide Beam
12	150124	Guide Arm Track
13	100009-013	Cap Screw, FH 5/16-18 x 1/2
14	100218-010	Clamp
15	100004-076	Cap Screw, HH 3/8-16 x 1
16	155152	Door Catch Support
17	156281	Saw Frame
18	100025-003	Lock Washer, 3/8
19	100004-076	Cap Screw, HH 3/8-16 x 3/4
20		**Blade Tension & Slide Block Assembly (page 18)**
21	150160-002	Door Latch Stud
22	100004-020	Cap Screw, HH, 5/16-18 x 1-1/4
23	100004-020	Cap Screw, HH, 5/16-18 x 1
24	100065-007	Hex Nut, 5/8-18
25	100034-005	Set Screw, 5/16-18 x 3/4
26	100004-015	Cap Screw, HH 5/16-18 x 3/4
27	100165-011	Shoulder Bolt, 3/8-16 x 1-1/2
28		**Blade Brush Assy (page 20)**
29	150369	Blade Brush Arm
30	100042-003	Thumb Screw, 1/4-20 x 2
31	100008-006	Cap Screw, SH 3/8-16 x 1
32	100004-013	Cap Screw, HH 5/16-18 x 5/8
33	156022	Wheel Plate, Drive End
34	100166-450	V- Belt
35	156144	Pulley, Large
36	100004-068	Cap Screw, HH 1/4-20 x 1-1/4
37	100025-001	Lock Washer, 1/4
38	**156058**	**Idle Wheel Assy for 1" Blades (includes 40 - 44)**
39	100019-016	Hex Jam Nut, 5/8-18
40	100068-005	Snap Ring (2 req'd)
41	100414-012	Ball Bearing
42	156415	Spacer (1 req'd)
43	100414-013	Bearing
44	156058	Idle Wheel
45	156029	Wheel Axle
46	156059	Drive Wheel
47	150414	Clamp
48	156284	Blade Guard Support
49	100013-005	Machine Screw, Button Head 10-32 x 3/8
50	150273	Blade Guard, Upper
51	105537	Spacer
52	150158	Blade Guard Mounting Block
53	100024-002	Wing Nut, 1/4-20
54	156028	Wheel Bolt (4 req'd)
55	150157	Blade Guard Lower
56	100013-006	Cap Screw, BH 1/4-20 x 1/2

Frame Lift Cylinder

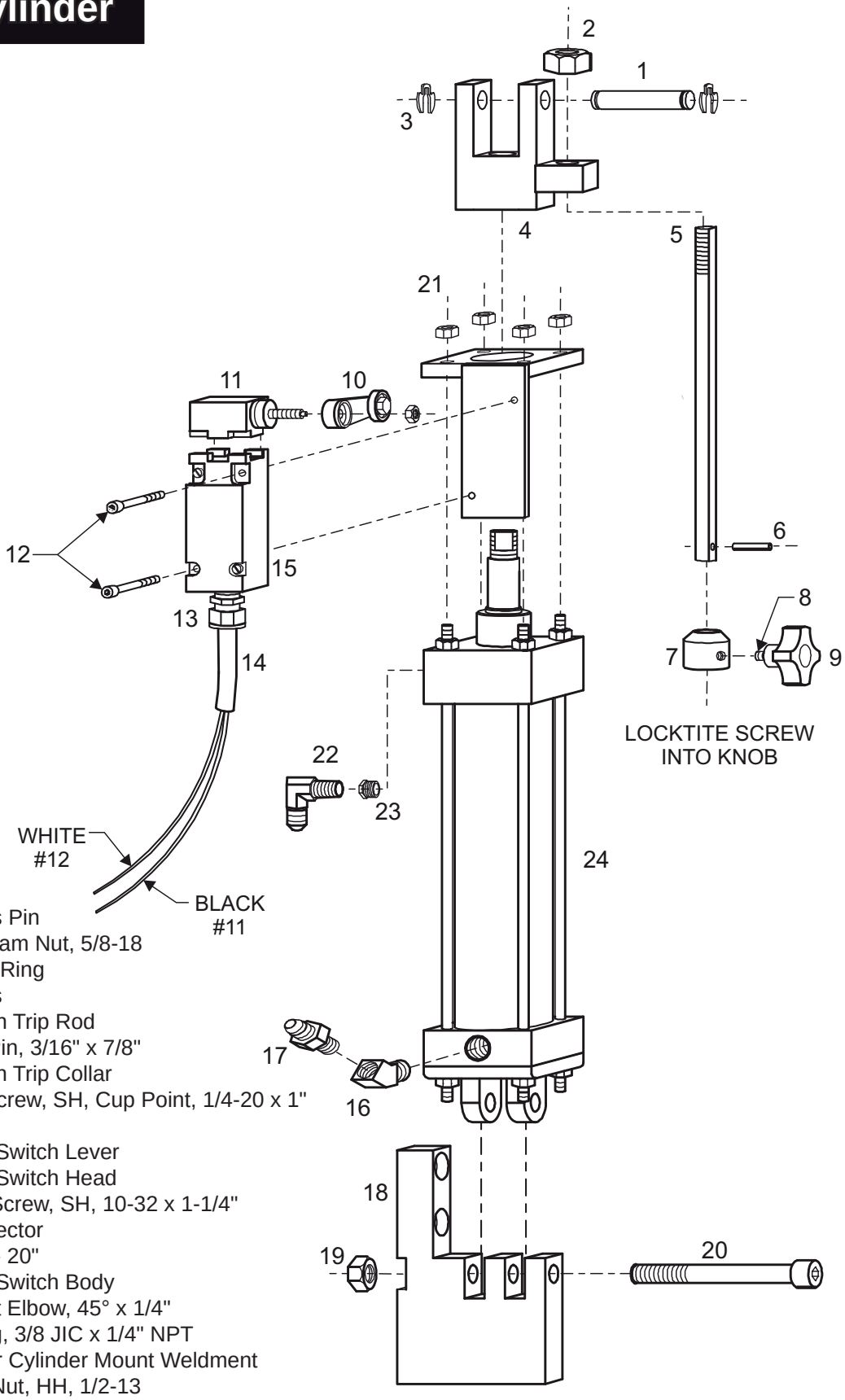

1	152164	Clevis Pin
2	100019-016	Hex Jam Nut, 5/8-18
3	100069-019	Snap Ring
4	152096	Clevis
5	152097	Switch Trip Rod
6	100053-021	Roll Pin, 3/16" x 7/8"
7	152098	Switch Trip Collar
8	100034-040	Set Screw, SH, Cup Point, 1/4-20 x 1"
9	100139-003	Knob
10	100782-015T	Limit Switch Lever
11	100782-017T	Limit Switch Head
12	100008-068	Cap Screw, SH, 10-32 x 1-1/4"
13	100612-001	Connector
14	100511-091	Wire - 20"
15	100782-016T	Limit Switch Body
16	100334-005	Street Elbow, 45° x 1/4"
17	100353-002	Fitting, 3/8 JIC x 1/4" NPT
18	153090	Lower Cylinder Mount Weldment
19	100019-005	Jam Nut, HH, 1/2-13
20	100008-081	Cap Screw, SH, 1/2-13 x 4-1/2"
21	100019-025	Hex Jam Nut, 5/16-24 (4 req'd)
22	100354-002	Elbow, 3/8" JIC x 1/4" NPT
23	100208-003	Reducing Bushing, 3/8" x 1/4"
24	099000-008	Cylinder

Bed Assembly

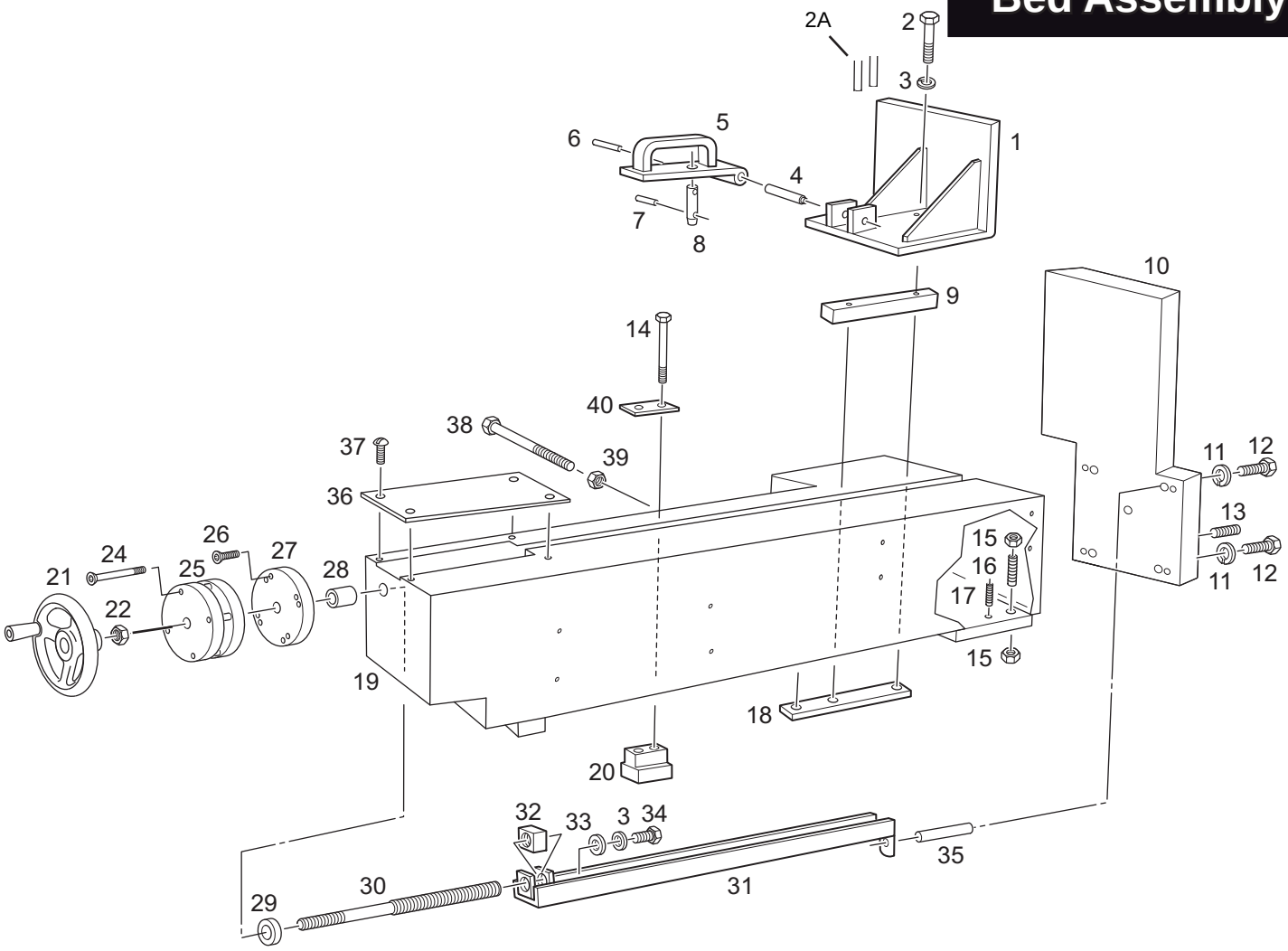

1	156013	Moveable Vise Assembly
2	100008-027	Cap Screw, SH, 3/8-16 x 2
2A	100053-043	5/16 X 1 5/8 Roll Pin (2)
3	100025-003	Lock Washer, 3/8
4	100053-002	Roll Pin, 3/8 x 2-1/2
5	150091	Lift Plate
6	100053-012	Roll Pin, 1/8 x 1-1/2
7	100053-015	Roll Pin, 1/8 x 3/4
8	150094	Vise Drive Pin
9	153078	Vise Jaw Key
10	156012	Stationary Vise Plate
11	100025-003	Lock Washer, 3/8
12	100004-031	Cap Screw, HH, 3/8-16 x 2
13	100034-005	Set Screw, SH, 5/16-18 x 3/4
14	100004-024	Cap Screw, HH 5/16-18 x 2-1/2
15	100019-005	Heavy Hex Jam Nut, 1/2-13
16	100175-001	Adjuster ring screw (4 reqd)
17	100008-022	SHCS 1/2-13 x 3" (4 reqd)
17a	100025-017	1/2 High Collar Lockwasher (4 reqd)
17b	100015-019	1/2-13 Hex Jam Nut (4 reqd)
18	153099	Slide Block Plate
19	156002	Saw Bed
20	150098	Slide Block
21	156030	Hand Wheel
22	100019-028	Hex Jam Nut, 3/4-10
24	100008-056	Cap Screw, SH, 5/16-18 x 2-1/2
25	107317	Cylinder, Modified
26	100009-006	Cap Screw, FH, 3/8-16 x 1
27	152105	Cylinder Mounting Plate
28	152104	Spacer
29	100402	Sleeve Bearing
30	150286	Vise Screw
31	153026	Vise Push Channel
32	M-061B	Vise Screw Nut
33	M-041	Vise Ratchet Guide Washer
34	100004-015	Cap Screw, HH, 5/16-18 x 3/4
35	153054	Support Rod
36	153056	Bed Cover
37	100000-018	Machine Screw,10-32 x 3/8
38	100008-081	Cap Screw, SH, 1/2-13 x 4-1/2
39	100019-005	Heavy Hex Jam Nut, 1/2-13
40	150097	Clamp Plate

Table Assembly

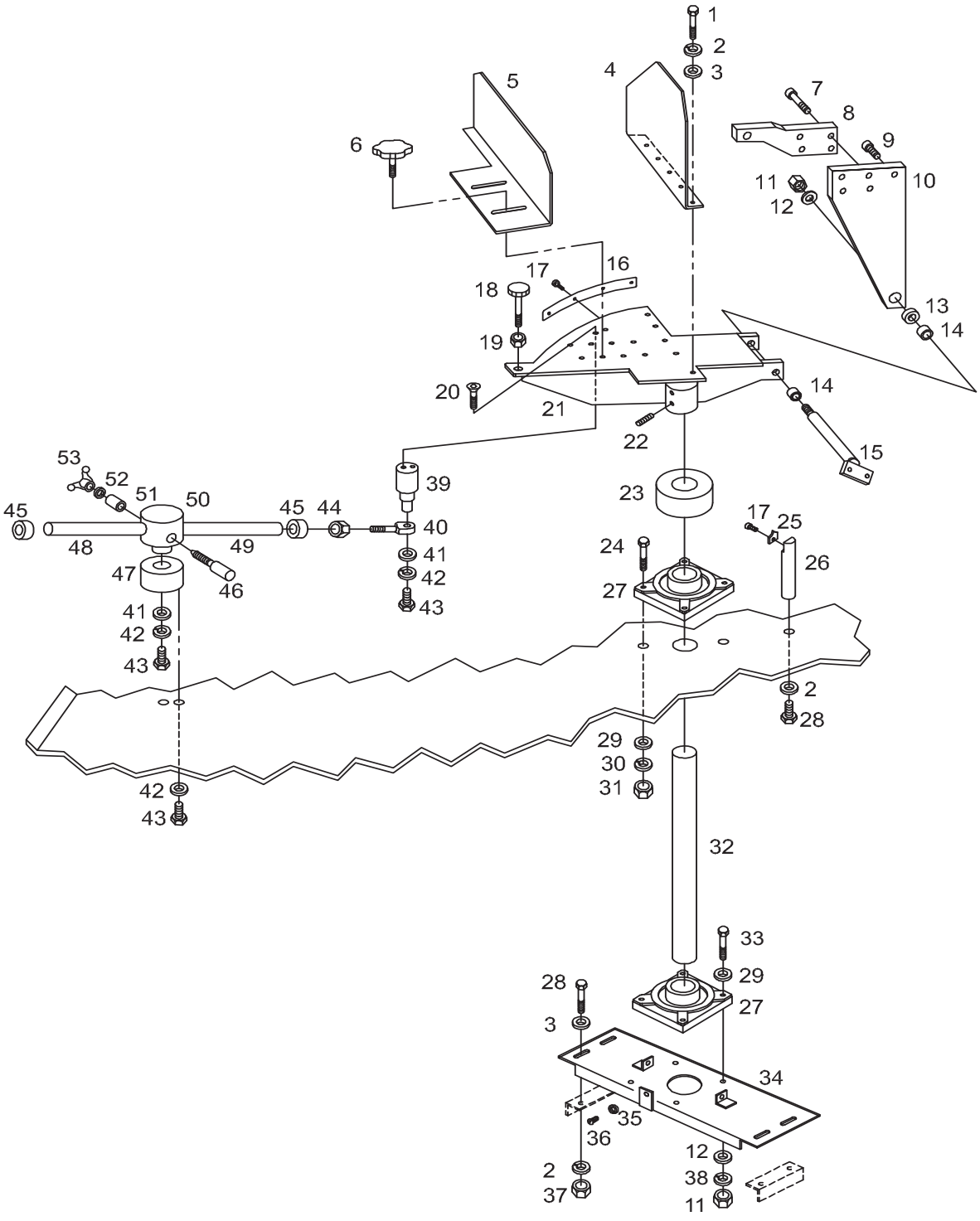

Table Assembly

1	100004-076	Cap Screw, HH, 3/8-16 x 3/4
2	100025-003	Lock Washer, 3/8
3	100029-004	Flat Washer, 3/8
4	153057	Stock Guide
5	156067	Stock Guide
6	210346	Handwheel
7	100008-008	Cap Screw, SH, 3/8-16 x 2-1/2
8	150274	Upper Cylinder Mount
9	100008-006	Cap Screw, SH, 3/8-16 x 1
10	150275	Pivot Arm
11	100017-007	Hex Lock Nut, 5/8-11
12	100029-008	Flat Washer, 5/8
13	150021-001	Pivot Bar Collar
14	100419-041	Sleeve Bearing
15	150276	Pivot Bar
16	153025	Protractor
17	100013-005	Cap Screw, BH, 10-32 x 3/8
18	104604	Adjusting Screw
19	101300	Hex Nut, 5/16-18
20	100009-006	Cap Screw, FH, 3/8-16 x 1
21	153040-001	Tip Off Table
22	100039-004	Set Screw, SH, 3/8-16 x 1
23	153024	Flange Bearing Cover
24	100004-039	Cap Screw, HH, 1/2-13 x 2
25	210335	Pointer
26	153080	Pointer Rod
27	100452-002	Flange Bearing
27A	100053-005	Roll Pin 3/16 x 1 (2 per bearing)
28	100004-027	Cap Screw, HH, 3/8-16 x 1
29	100030-007	Flat Washer, 1/2
30	100025-005	Lock Washer, 1/2
31	100019-027	Hex Jam Nut, 1/2-13
32	156033	Post Frame Support
33	100004-039	Cap Screw, HH, 1/2-13 x 2
34	153034	Lower Bearing Mount
35	100025-001	Lock Washer, 1/4
36	100004-053	Cap Screw, HH, 1/4-20 x 1
37	100015-017	Hex Nut, 3/8-16
38	100025-005	Lock Washer, 1/2
39	153035	Table Lock Bar
40	098081	Ball Joint
41	M-041	Guide Washer (2 req'd)
42	100025-002	Lock Washer, 5/16
43	100004-015	Cap Screw, HH, 5/16-18 x 3/4
44	100065-005	Hex Nut, 1/2-20
45	098030-011	Shaft Collar (2 req'd)
46	155203	Wedge and Bolt Assembly
47	153036	Base to Table Lock
48	153039	Shaft for Table Lock
49	153039	Shaft for Table Lock
50	153037	Table Lock Swivel
51	155190	Wedge
52	100030-005	Flat Washer, 3/8
53	155205-002	Wing Nut

Base Assembly

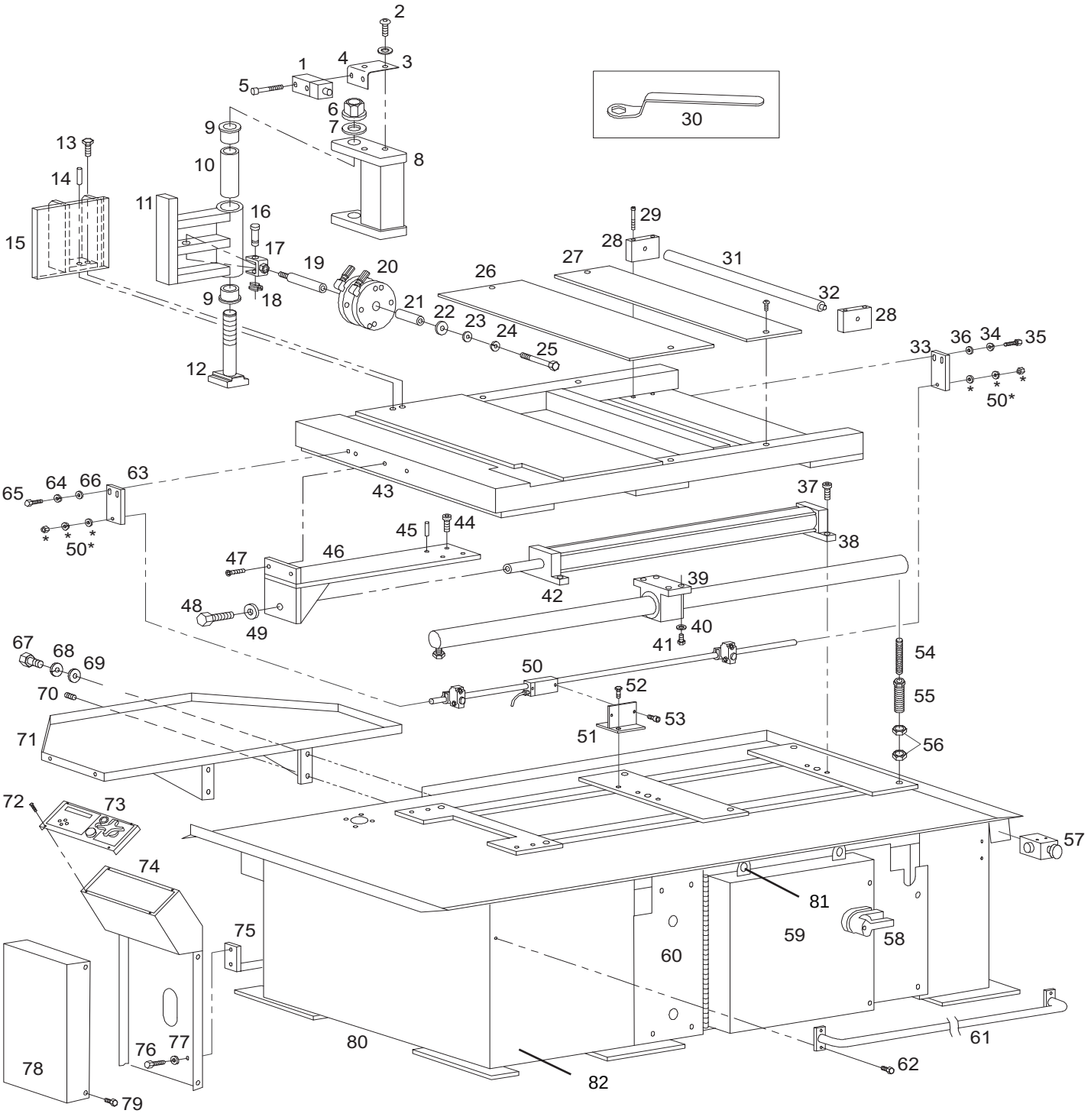

Base Assembly

1	100782-015T	Limit Switch Lever
	100782-022	Limit Switch Body
	100782-023	Limit Switch Head
2	100013-008	Cap Screw, BH, 1/4-20 x 3/8
3	100029-002	Flat Washer, 1/4
4	156175	Switch Bracket
5	100008-068	Cap Screw, SH, 10-32 x 1-1/4
6	156189	Flanged Nut
7	156188	Washer
8	156190	Jaw Weldment
9	156198	Flanged Bearing
10	156195	Bushing
11	156184	Lever Arm Weldment
12	156199	Bolt, T-Slot, 1-8 x 10
13	100008-037	Cap Screw, SH, 5/16-18 x 1-3/4
14	100053-036	Roll Pin, 1/4 x 2
15	156016	Stationary Shuttle Vise Jaw
16	156185	Fixture Pin
17	156182	Clevis
18	100069-019	Snap Ring
19	156183	Cylinder Rod Extension
20	107317	Cylinder, Modified
21	156187	Cylinder Insert
22	M-041	Vise Ratchet Guide Washer
23	100029-004	Flat Washer, 3/8, USS
24	100025-003	Lock Washer, 3/8
25	100004-080	Cap Screw, HH, 3/8-16 x 4-1/2
26	156122	Shuttle Cover Plate
27	156114	Shuttle Cover Plate
28	156120	Roller Mount
29	100008-064	Cap Screw, SH, 5/16-18 x 2
30	156200	Vise Wrench
31	156121	Infeed Roller
32	100013-008	Cap Screw, BH, 1/4-20 x 3/8
33	156069	BarFeed Shaft Mt + shrt spacer
34	100025-001	Lock Washer, 1/4
35	100004-007	Cap Screw, HH, 1/4-20 x 3/4
36	100029-002	Flat Washer, 1/4
37	100008-021	Cap Screw, SH, 5/16-18 x 1-1/4
	100025-002	Split Lockwashers
38	099010-013	Cylinder, Shuttle Feed
39	156160	Linear Pillow Block Bearing
40	100025-003	Lock Washer, 3/8
41	100004-029	Cap Screw, HH, 3/8-16 x 1-1/4
42	156161	Shuttle Rail
43	156100	Shuttle Ass'y
44	100008-021	Cap Screw, SH, 5/16-18 x 1-1/4
45	100053-039	Roll Pin
46	156126	Shuttle Cylinder Bracket
47	100009-016	Cap Screw, FH, 3/8-16 x 1-1/2
48	100004-125	Cap Screw, HH, 3/4-16 x 1-3/4
49	100009-009	Flat Washer, 3/4, USS
50	156150	Linear Encoder Ass'y
51	156131	Encoder Bracket
52	100004-003	Cap Screw, HH, 1/4-20 x 1/2
53	100008-095	Cap Screw, SH, 10-32 x 1-1/2
54	100034-050	Set Screw, SH, 1/2-13 X 4
55	100175	Leveling Screw
56	100019-018	Hex Jam Nut, 3/4-16
57	100871-028	Emergency Stop Button
58	156051	Base Side Panel
59	156088	Electrical Enclosure
60	156052	Base Side Panel
61	156071	Rail
62	100004-003	Cap Screw, HH, 1/4-20 x 1/2
63	156070	Bar Feed Shaft Mount
64	100025-001	Lock Washer, 1/4
65	100004-007	Cap Screw, HH, 1/4-20 x 3/4
66	100029-002	Flat Washer, 1/4
67	100004-018	Cap Screw, HH, 5/16-18 x 1
68	100025-002	Lock Washer, 5/16
69	100029-003	Flat Washer, 5/16
70	100034-006	Set Screw, SH, 5/16-18 x 7/8
71	153031	Chip Pan Weldment, Lower
72	100013-008	Cap Screw, BH, 1/4-20 x 3/8
73	156066	Console Cover
74	156055	Console
75	156063	Console Support
76	100004-013	Cap Screw, HH, 5/16-18 x 5/8
77	100025-002	Lock Washer, 5/16
78	156050	Console Leg
79	100004-007	Cap Screw, HH, 1/4-20 x 3/4
80	156001	Saw Base Weldment
81	100004-029	Hex Hd Cap Scr 3/8-16 x 1-1/4
	100025-003	Split Lockwasher 3/4
	100017-003	Heavy Hex Nut 3/8-16
	100029-004	3/8 Large Flat Washer
82	156049	Base Bottom Hydraulic plate
	100004-013	Hex Hd C Scr 5/16-18 x5/8 (4)
	100025-002	Split Lockwasher 5/16 (4)

Blade Guide Assembly

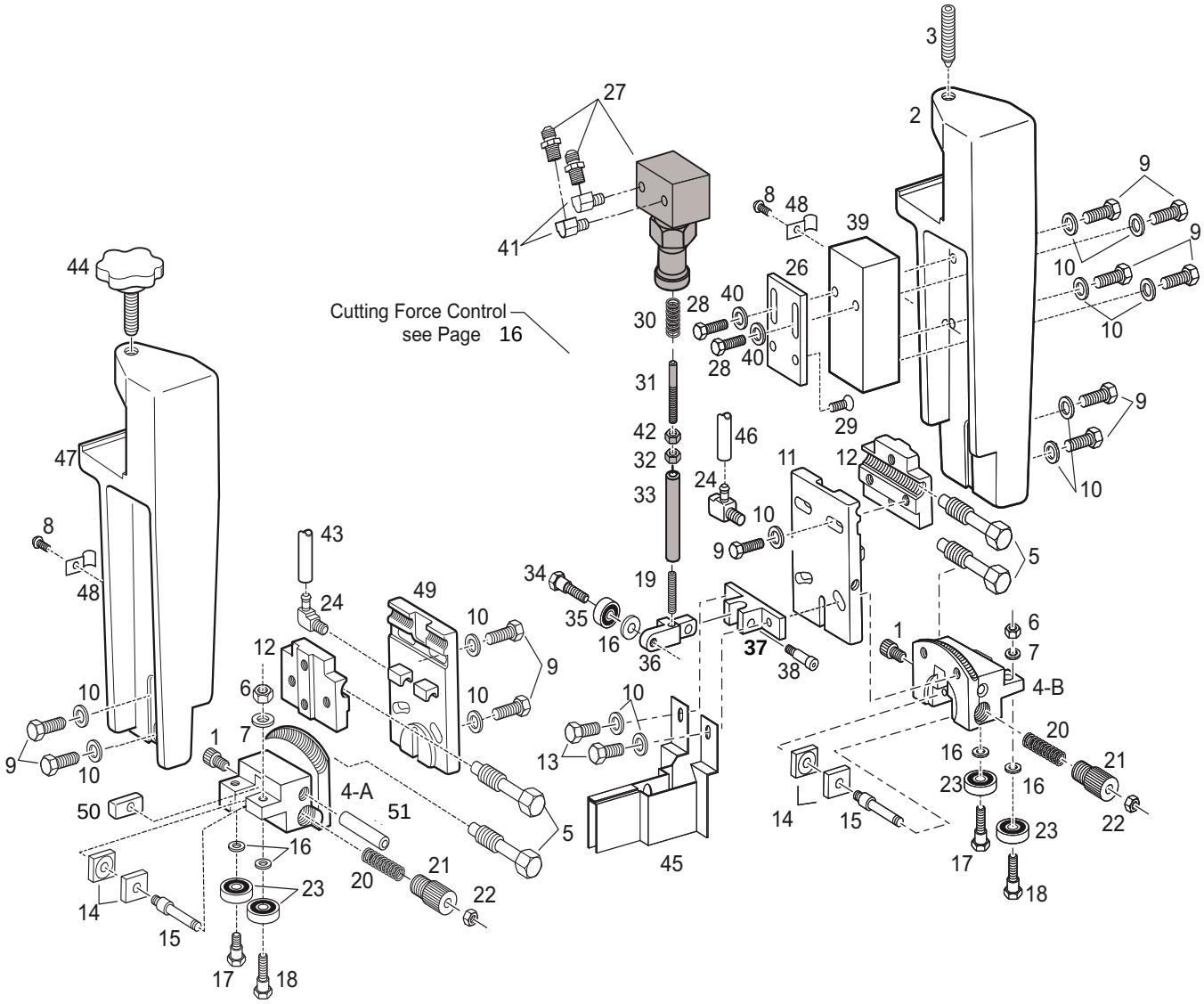

Blade Guide Assembly

1	100008-004	Cap Screw, SH, 5/16-18 x 5/8"
2	152117-001	Guide Bracket, D.E.
3	100035-013	Set Screw, SH, Flat Pt., 1/2-13 x 1-1/4"
4-A	152119	Roller Guide Support I.E.
4-B	152120	Roller Guide Support D.E.
5	152151	Adjusting Screw
6	101300	Hex Nut, 5/16-18
7	100027-005	Internal Tooth Lockwasher, 5/16"
8	100013-005	Cap Screw, Button SH,10-32 x 3/8"
9	100004-018	Cap Screw, HH, 5/16-18 x 1"
10	100029-002	Flat Washer USS, 1/4"
11	152121-003	Horizontal Adjusting Block
12	152155	Vertical Adjusting Block
13	100004-020	Cap Screw, HH, 5/16-18 x 1-1/4"
14	106317	Fixed Carbide Guide
15	152157	Stud, Side Carbide Guide
16	100097-001	Flat Washer
17	B-109	Eccentric Roller Axle
18	B-043	Roller Axle
19	100034-045	Set Screw, SH, Cup Pt., 1/4-20 x 1-1/4"
20	100136-009	Spring
21	152156	Adjusting Knob
22	100023-006	Nylon Lock Nut, 1/4-20
23	100416-001	Bearing
24	100324-009	Hose Barb Fitting, 90°
25	100218-018	Tubing Clamp, 3/8"
26	156260	Mounting Bracket, Meter Valve
27	156250	Metering Valve Assembly
28	100004-003	Cap Screw, HH 1/4-20 x 1/2"
29	100009-010	Cap Screw, Flat SH,1/4-20 x 1/2"

30-36 See Opposite page

37	156265	Roller Arm Mount
38	100165-018	Shoulder Bolt, SH, 5/16 x 5/8"
39	156268	Metering Valve Stand-Off
40	100030-003	Flat Washer, SAE, 1/4"
41	100334-004	Street Elbow, 1/8"
42	100020-009	Nut, Self Locking, Top Lock, 5/16-18
43	100350-040	Coolant Hose, I.E.
44	105335-001	Handwheel & Screw Assembly
45	150485	Blade Guard, D.E.
46	100350-018	Coolant Hose, D.E.
47	152118	Roller Guide Bracket, I.E.
48	100218-018	Tubing Clamp, 3/8"
49	152121-002	Horizontal Adjusting Block
50	152153	Carbide Guide
51	100053-036	Roll Pin
	152158-006	**Drive End Blade Guide assy before s/n 30022**
	152158-007	**Drive End Blade Guide Assy after s/n 30022**
	152159-001	**Idle End Blade Guide Assy**
	152160-001	**Guide Support Assy D.E. (bottom casting (4-B) and everything that mounts on it)**
	152161-001	**Guide Support Assy I.E. (bottom casting (4-A) and everything that mounts on it)**

Cutting Force Detail

BEFORE S/N 30022

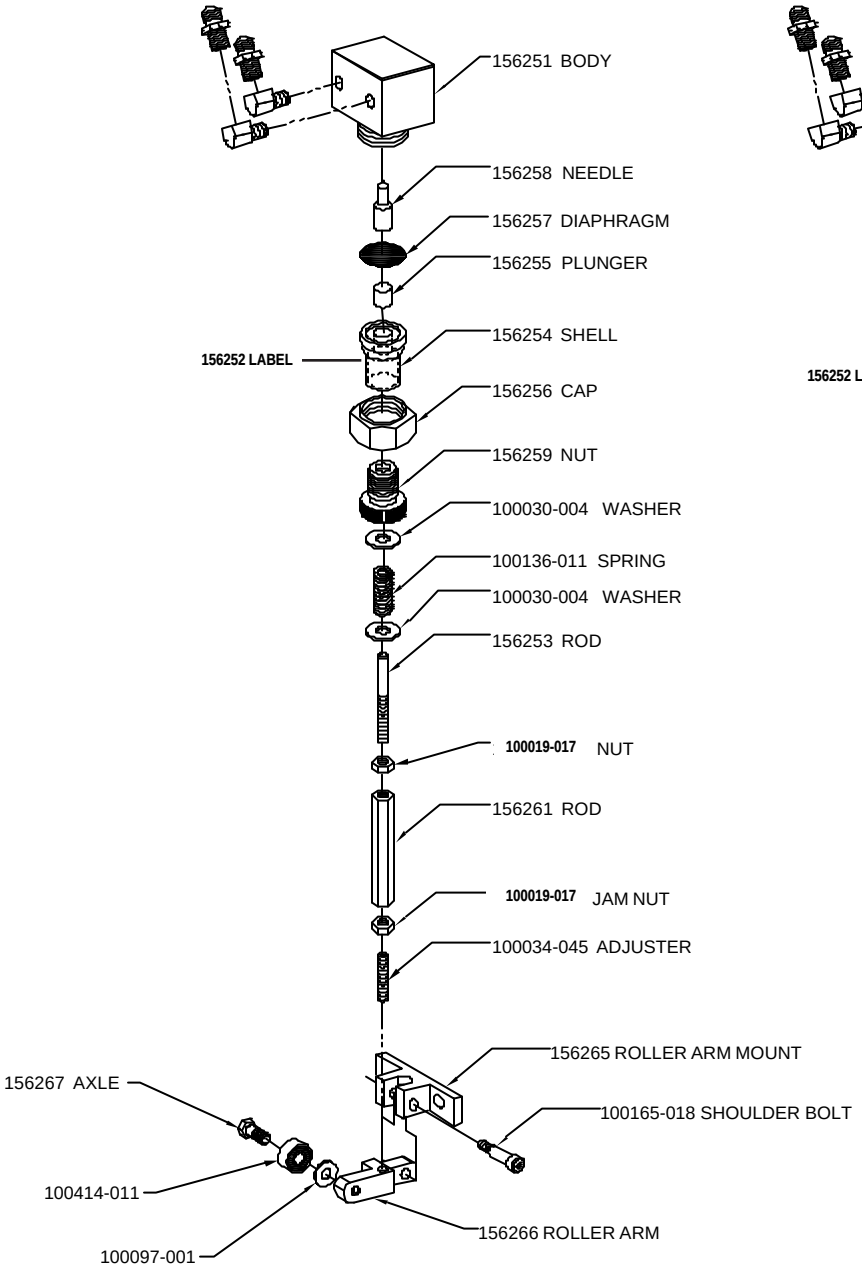

S/N 30022 & AFTER

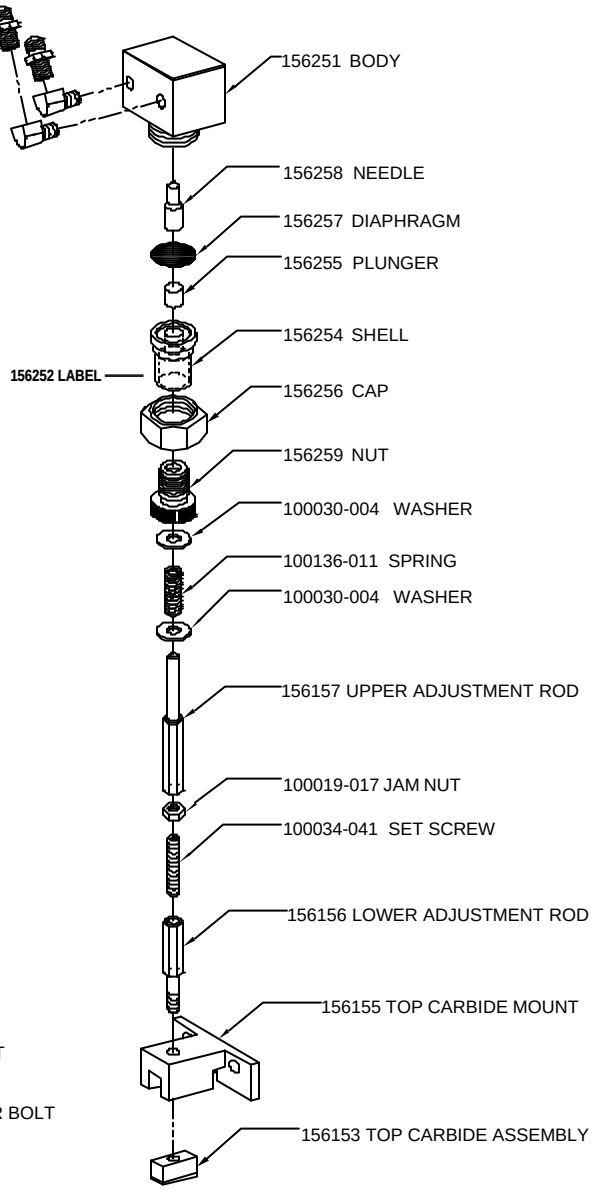

Coolant System

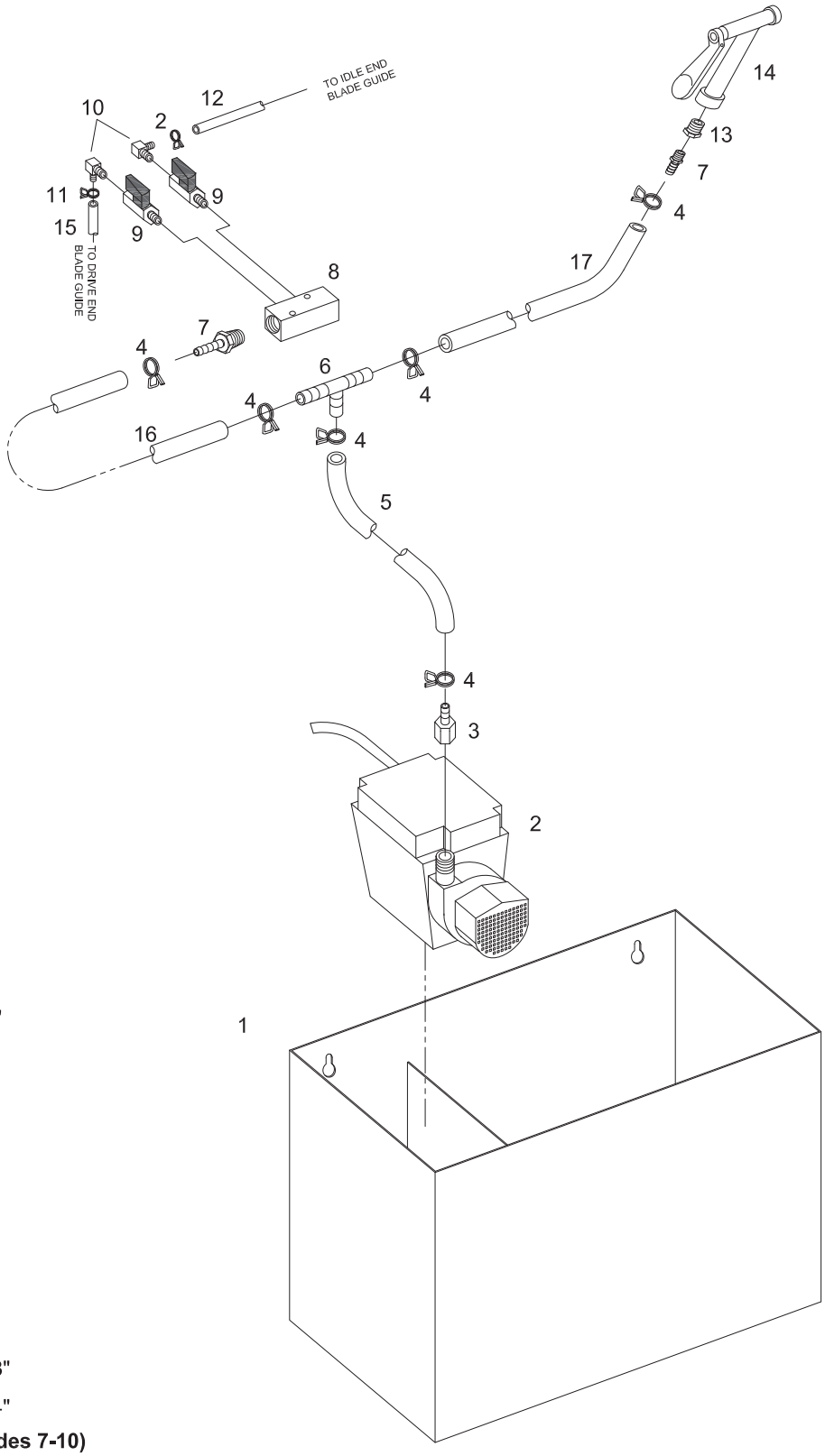

1	150066	Coolant Tank
2	100249-002	Coolant Pump
3	102617	Adapter
4	100219-001	Tubing Clamp
5	100220-039	Coolant Hose, $\frac{3}{8}$" X 13"
6	100340-001	'T' Barb Fitting
7	100324-003	Hose Barb Fitting
8	152167	Coolant Manifold
9	100226-004	Valve, Miniature Ball
10	100324-009	Hose Barb Fitting, 90°
11	100219-002	Tubing Clamp
12	100350-040	Coolant Hose, $\frac{1}{4}$" x 40"
13	100347	Adapter
14	100348	Nozzle
15	100350-018	Coolant Hose, $\frac{1}{4}$" x 18"
16	100220-021	Coolant Hose, $\frac{3}{8}$" x 168"
17	100220-050	Coolant Hose, $\frac{3}{8}$" x 204"
	152177-002	**Manifold Assy (includes 7-10)**

used for serial #s before 30005 and after 30020
for serial numbers between, use next page.

Rite Tensioning Device®

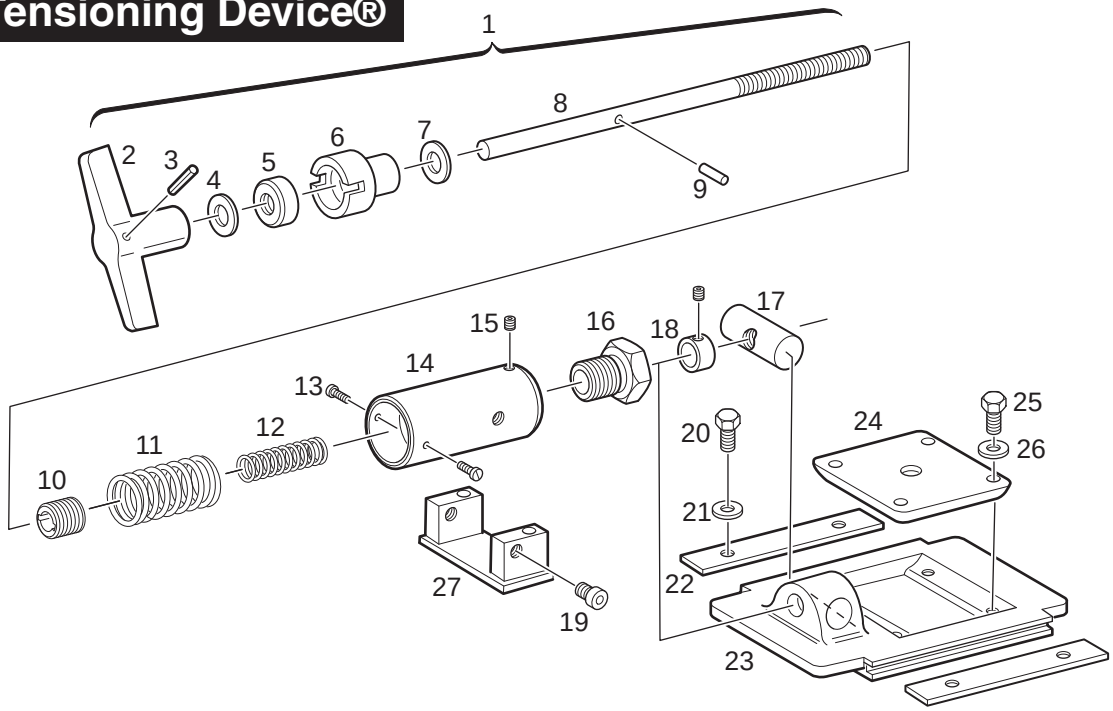

Calibrating the WELLSAW RITE-TENSION ® Blade Tensioning Device

The Rite-Tension® device is a simple turn counter that is activated by blade tension and can be easily adjusted in the field.

Please review the operation instructions before making any adjustment:

1. LOOSENING

When replacing a worn or broken blade always turn the "T" handle out at least six (6) turns (counter-clockwise).
This will reset the device. *Always* **push-in** on the handle when loosening, this will insure that the internal counter is engaged.

2. TIGHTENING

Always **pull out** on the "T" handle when tightening the device (clockwise). After a number of turns the "T" handle will come to a hard stop.
At this point the blade will be properly tensioned. Do not force the unit beyond this point.
Note: If the mechanism does not seem to come to a hard stop but continues to tighten, stop and repeat steps one and two. Check to make sure the blade is properly positioned on the band wheels and is not binding in the guides during the tightening process.

Calibration

The final tension is determined by the Adjusting Nut, pn 150070 (see "A" in drawing). The "rough" position can be checked by measuring the clearance between the nut and the Tensioning Housing, pn 150067, (see "C").
A clearance of 1/4" will be within a safe range of the correct tension. When a tension guage becomes available the device should be calibrated as follows: Loosen the set screw (B) one turn.

-If the band tension needs to be *increased* the adjusting nut should be turned out, one flat at a time, then the set screw tightened and the device rechecked.

-If the tension needs to be *decreased* the adjusting nut should be turned in, one flat at a time and rechecked.

The device must be in the "loosened" or "open" position to make this adjustment.

RITE-TENSION®
ADJUSTMENT

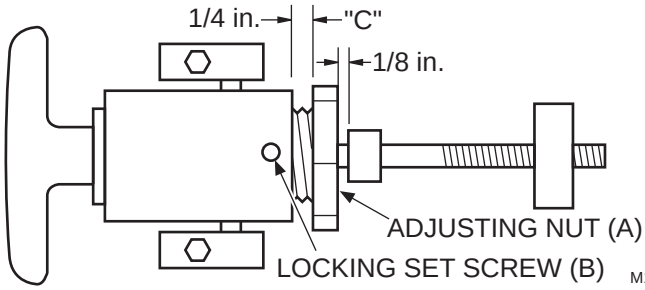

M1316RiteTensionDev

used for serial #s before 30005 and after 30020
for serial numbers between, use next page.

Rite Tensioning Device®

Caution:
The Rite Tension ® blade tensiong device has been factory calibrated for your saw.
When re-tightening or replacing a blade, the 'T' handle must be turned counter-clockwise at least six turns to reset the Rite Tension ® mechenism.

1	**150075**	**Blade Tensioning Ass'y (includes items 2 thru 17 & 27)**
2	101184	Take Up Screw Handle
3	100053-005	Roll Pin, 3/16 x 1
4	100030-007	Flat Washer, 1/2
5	100410-001	Thrust Bearing
6	150068	Bearing Housing
7	100116-007	Belleville Washer (2 req'd)
8	**150074**	**Take Up Screw (includes items 2 & 9)**
9	100052-026	Dowel Pin, 3/16 x 11/16
10	150069	Turn Counter
11	100136-006	Spring, Large Diameter
12	100136-001	Spring, Small Diameter
13	100000-010	Machine Screw, 8-32 x 5/16 (2 req'd)
14	150067	Blade Tension Housing
15	100034-008	Set Screw, 1/4-20 x 1/4
16	150070	Tension Adjuster
17	155068	Swivel Nut
18	150190	Tensioner Support
19	100008-072	Cap Screw, HH 5/16-18 x 3/8 (2 req'd)
20	100004-013	Cap Screw, HH 5/16-18 x 5/8 (4 req'd)
21	100025-002	Lock Washer, 5/16 (4 req'd)
22	B-046	Slide Block Guide, (2 req'd)
23	101164	Slide Block
24	B-010	Wheel Adjusting Block
25	100004-019	Cap Screw, HH 5/16-18 x 1-1/8 (4 req'd)
26	102360	Spacer (4 req'd)
27	098030-004	Collar, w/set screw

Blade Tension Mechanism

used between s/n 30005 and 30019

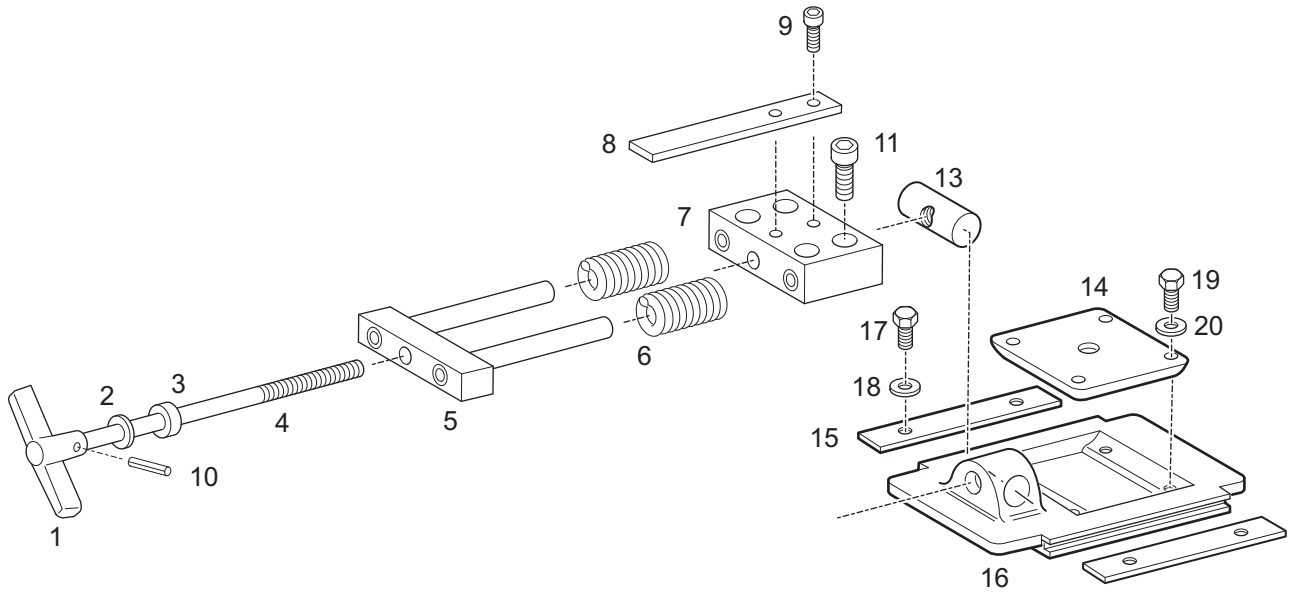

Blade Brush Assembly

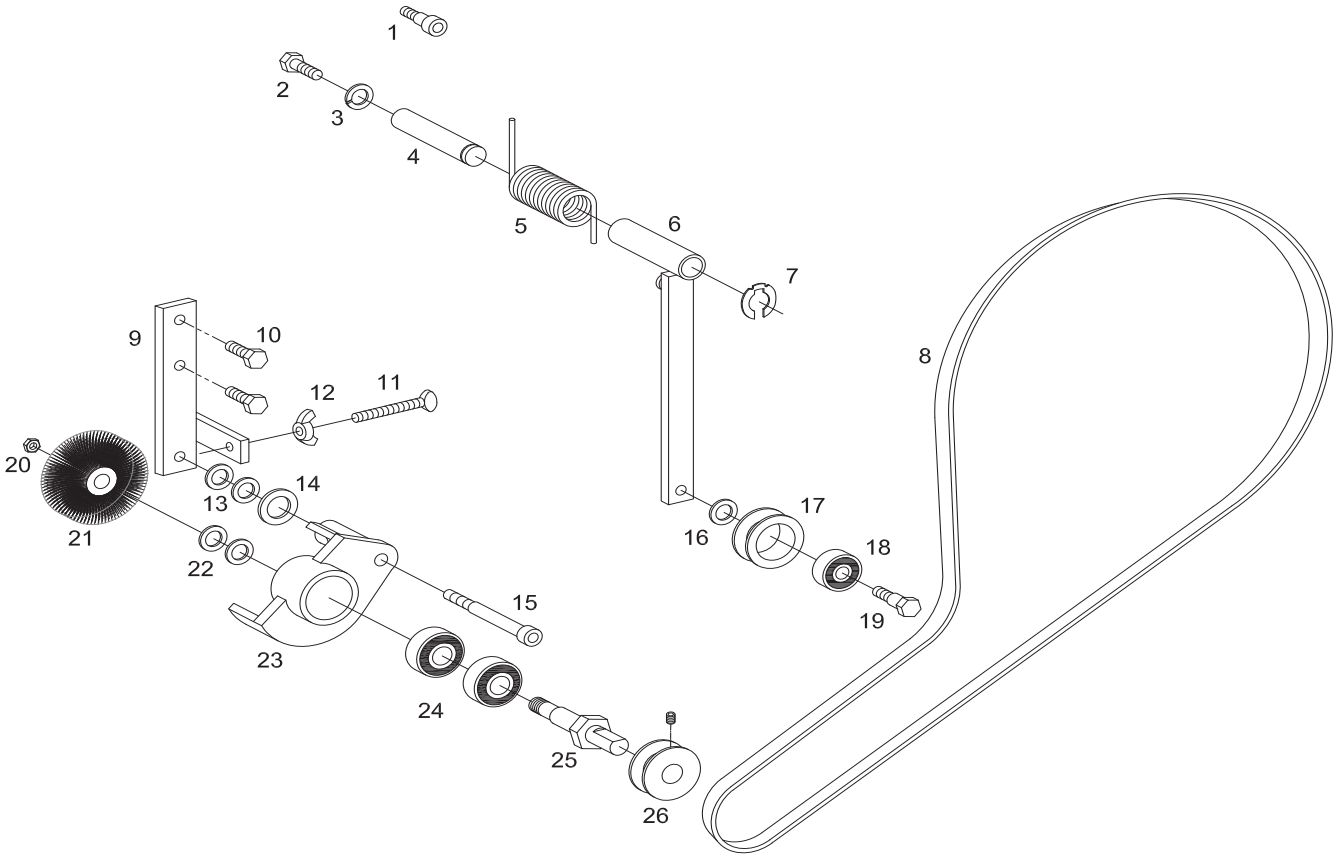

Blade Tension Mechanism

used between s/n 30005 and 30019

1	101184	Handle
2	100030-007	Flat Washer, 1/2
3	100410-001	Thrust Bearing
4	107321	Take Up Screw
5	155259	Tensioner Slide Assembly
6	101198	Spring
7	155262	Tensioner Support
8	155263	Tensioner Slide Stop
9	100013-009	Cap Screw, BH, 10-32 x 1/2
10	100053-005	Roll Pin, 3/16 x 1
11	100008-006	Cap Screw, SH, 3/8-16 x 1
12	**155264**	**Take Up Screw Assembly (includes Items 1,4 & 10)**
13	155068	Swivel Nut
14	B-010	Wheel Adjusting Block
15	B-046	Slide Block Guide
16	101164	Slide Block
17	100004-013	Cap Screw, HH, 5/16-18 x 5/8
18	100025-002	Lock Washer, 5/16
19	100004-018	Cap Screw, HH, 5/16-18 x 1
20	100029-003	Flat Washer, 5/16

Blade Brush Assembly

Note: Adjust thumb screw (11) so that the brush makes light contact with the blade. This avoids dulling the blade and prevents premature brush wear.

1	100165-007	Shoulder bolt, 3/8 x 3/8
2	100004-018	Cap Screw, HH 5/16-18 x 1
3	100025-002	Lockwasher, 5/16
4	150160-002	Door Latch Stud
5	150360	Spring
6	150364	Belt Tension Arm
7	100069-003	Snap Ring
8	100166-450	V' Belt
9	150369	Blade Brush Arm
10	100004-015	Cap Screw, HH 5/16-18 x 3/4
11	100042-003	Thumb Screw, 1/4-20 x 2
12	100024-002	Wing Nut, 1/4-20
13	100029-002	Flat Washer 1/2 USS (uses 2)
14	100030-005	Flat Washer 3/8 SAE
15	100165-015	Shoulder Bolt 3/8 x 1-3/4
16	100097-001	Washer
17	150361	Pulley, belt idler
18	100416-001	Bearing
19	B-043	Axle
20	100019-005	Hex Jam Nut 1/2-20
21	100133-004	Blade Brush
22	100030-007	Flat Washer 1/2 USS (uses 2)
23	150257	Brush Housing
24	100404-001	Bearing (2 required)
25	150126	Brush Arbor
26	100167-003	Small Pulley w/ set screw
27	**150272**	**BLADE BRUSH ASSEMBLY** (includes items 20-26)

Valve & Manifold Detail

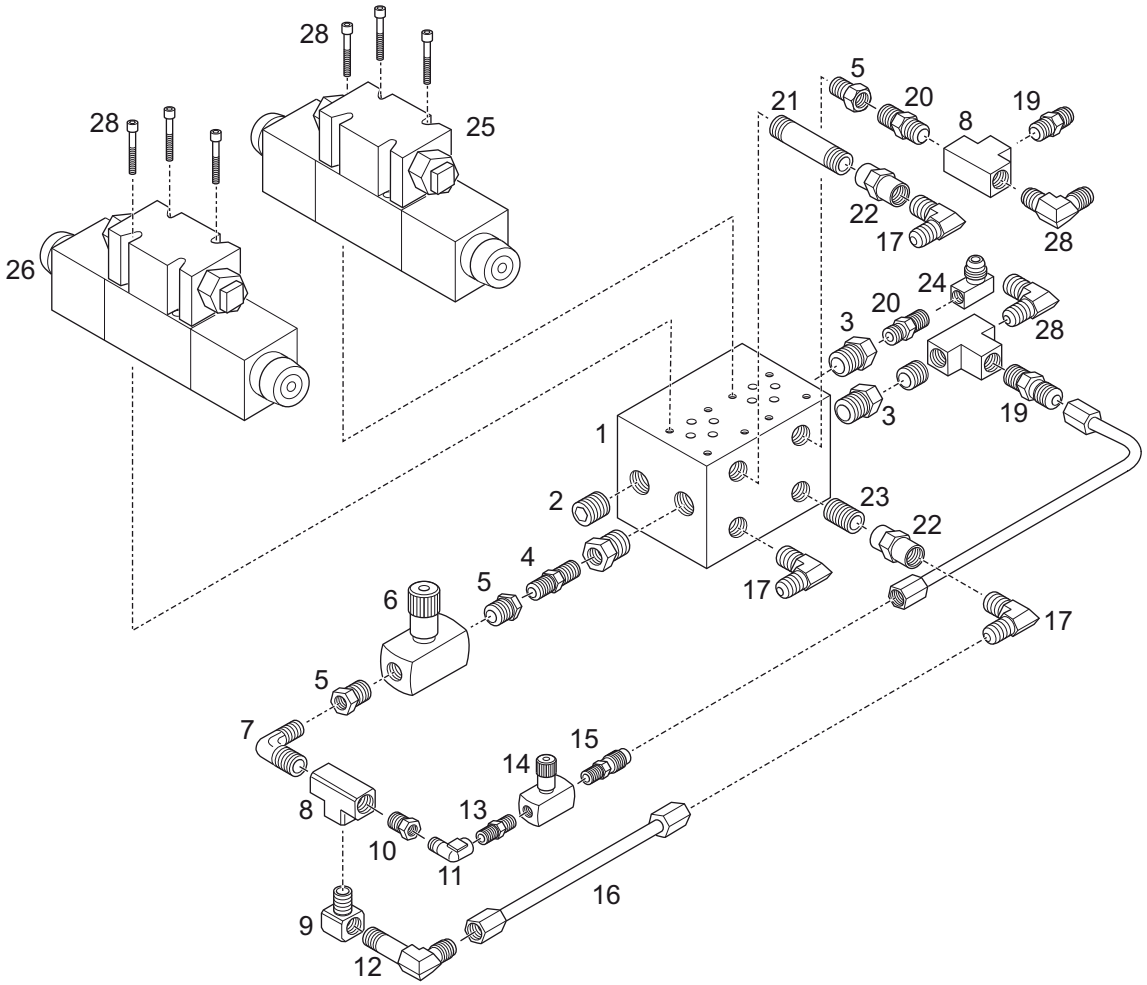

1	156136	2 Station Bar Manifold
2	100211-019	Plug, SH, 1/2", Flush
3	100208-005	Reducer Bushing, 1/2 NPT-1/4 NPT, (3 req'd)
4	100332-001	Nipple, Hex, 1/4 NPT
5	099811-003	Reducer Bushing, 3/8 NPT-1/4 NPT, (3 req'd)
6	100286-013	Flow Control Valve, 3/8 NPT
7	100349-011	1/4 NPTF, Elbow, 90°, Male
8	100333-001	T, 1/4 NPTF, Brass (3 req'd)
9	100334-002	Elbow, 90° Street, 1/4 NPT
10	099811-001	Reducer Bushing, 1/4 NPT-1/8 NPT
11	100334-004	Elbow, 90° Street, 1/8 NPT
12	100354-005	Elbow, 90° 3/8 JIS - 1/4 NPT Long
13	099701-001	Nipple, Hex, 1/8 NPT
14	100286-012	Flow Control Valve, 1/8 NPT
15	100353-001	Connector, Male, 3/8 JIS - 1/8 NPT
16	100331-047	Hose Assembly
17	100354-003	Elbow 90° 3/8 NPTF 5 req'd
18	100331-048	Hose Assembly
19	100353-002	Connector, Male, 3/8 JIS - 1/4 NPTF (2 req'd)
20	100325	Inline Check Valve (2 req'd)
21	100203-037	Nipple, Black, 3/8 NPT x 2"
22	100307-003	Coupler, Pipe, 3/8 NPT (2 req'd)
23	100332-010	Nipple, Close, 3/8 NPT (2 req'd)
24	100355-001	Elbow, 3/8 JIS - 1/4 FNPTF
25	100673-037	Solenoid Valve, DG4V-3S-2C-MFW-B5-60
26	100673-036	Solenoid Valve, DG4V-3S-6C-MFW-B5-60
27	100203-018	Nipple, 1/4 Close, Black
28	100354-002	Elbow, 90°, 3/8 JIS-1/4 NPTF, (2 req'd)
	100673-038	Air Manifold (not shown) (2 reqd)
	156049	Hydraulic Mounting Plate base (not shown)

Hydraulic Motor & Pump Assembly

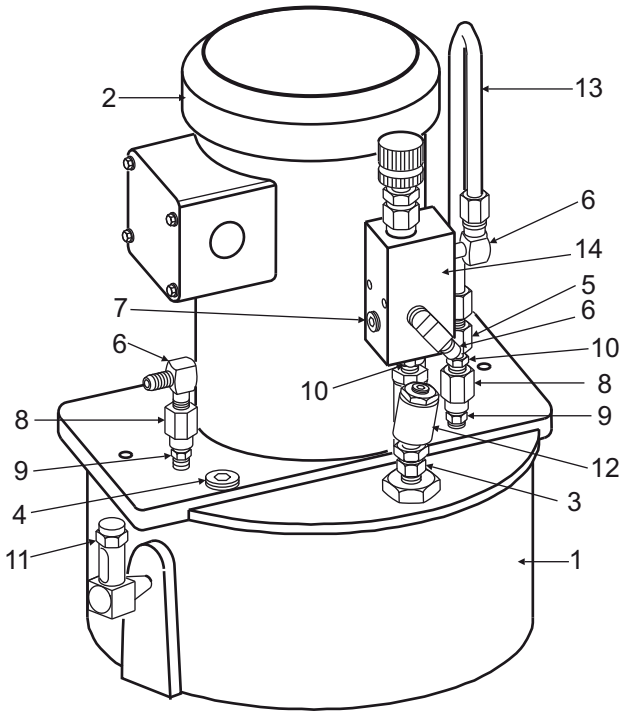

	156130	Motor/Pump Assembly Complete
1	156203	Pump Assembly (not pictured-inside tank)
2	156202	Motor
3	100237-005	Inline Check Valve
4	100211-019	Plug, SH, 1/2", Flush
5	100255-010	Adapter, Female, 3/8 JIS - 1/4 NPT - Male
6	100354-002	Elbow, 90°, Male, 3/8 JIS - 1/4 NPT
7	100211-013	Plug, SH, 1/4", Flush
8	100248-003	Reducer, Female, 1/4 NPT - Female 1/8 NPT
9	100332-005	Nipple, Hex, 1/8 NPT
10	100332-001	Nipple, Hex, 1/4 NPT
11	100317-019	Site Gage
12	100317-020	Strainer, Cast
13	100331-049	Hose Assembly
14	100319-011	Relief Valve Assembly

Filter Assembly

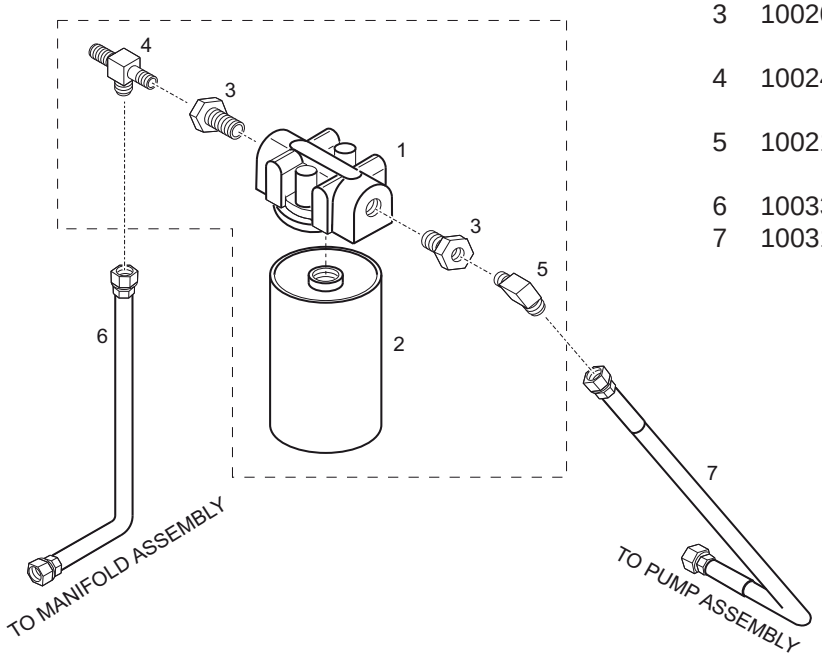

1	156218	Filter Head
2	156219	Filter
3	100208-008	Reducer Bushing, 3/4 NPT - 1/4 NPT
4	100247-001	End Run "T", Male, 3/8 T - 1/4 NPT
5	100214-004	Elbow, 90°, Male, 3/8 T - 1/4 NPT
6	100331-050	Hose Assembly
7	10031-051	Hose Assembly

Motor & Gearbox

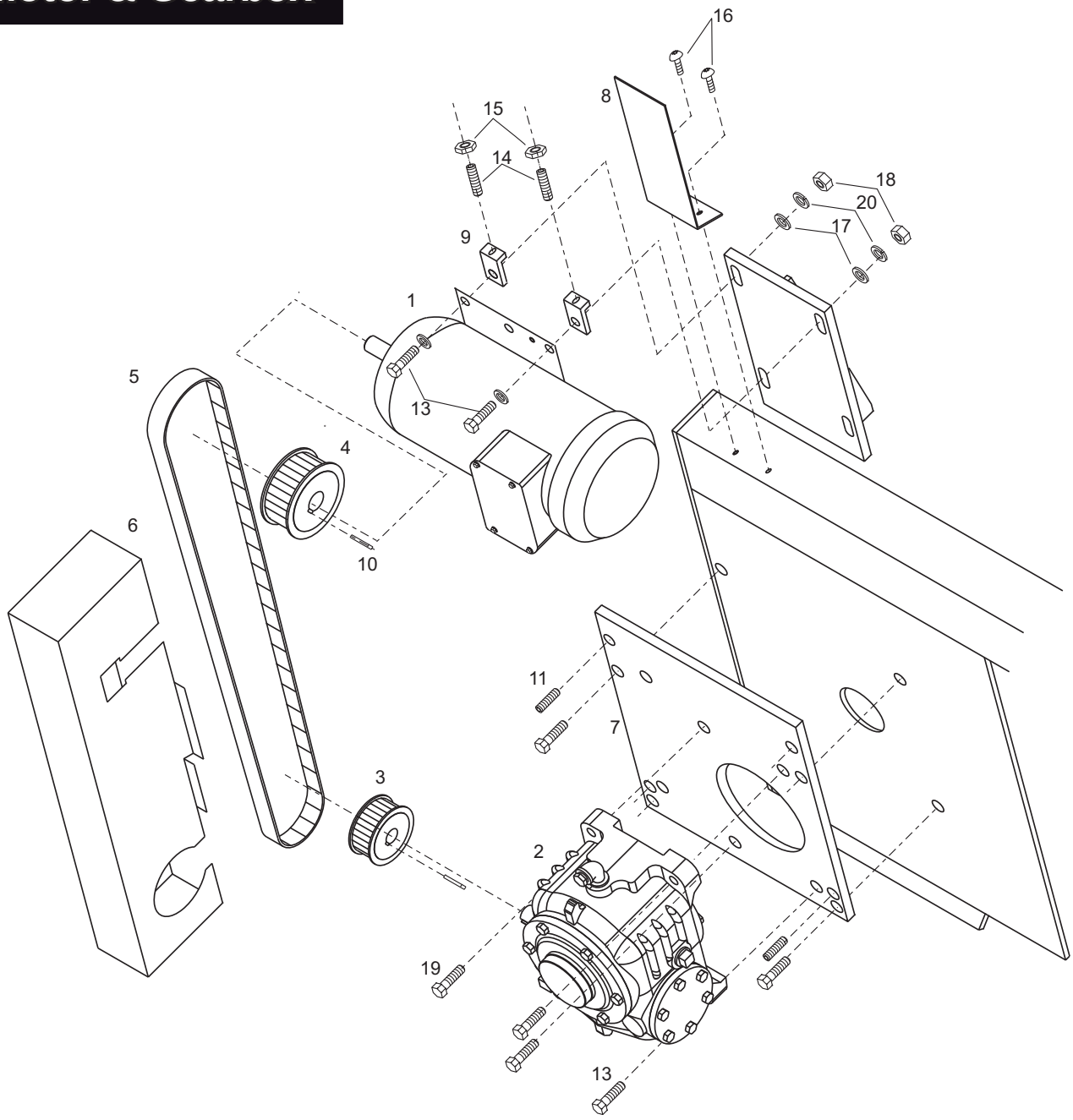

1	100835-015	Motor, 5HP, TEFC, 208, 230, 460/ 60/ 3
2	156024	Gearbox, 2.5", 25:1 Ratio
3	100141-015	Timing Pulley, w/ Bushing
4	100141-014	Timing Pulley, w/ Bushing
5	100140-008	Timing Belt
6	156140	Belt Guard
7	156022	Wheel Plate
8	156141	Belt Guard Plate
9	156247	Motor Jack
10	100056-010	Key, 3/16 x 1
11	100034-006	Set Screw, SH, 5/16- 8 x 7/8
12	100004-018	Cap Screw, HH, 5/16-18 x 1
13	100004-022	Cap Screw, HH, 5/16-18 x 1-1/2
14	100039-004	Socket Head, Half-Dog, 3/8-16 x 1
15	100019-014	Hex Nut, Jam, 3/8-16
16	100013-005	Socket Head, BH, 10-32 x 3/8
17	100025-002	Washer, Lock, 5/16
18	101300	Heavy Hex Nut, 5/16
19	100004-020	Cap Screw, HH, 5/16-8 x 1-1/4
20	100030-004	Washer, Flat, 5/16, S.A.E.

Holdown Clamps

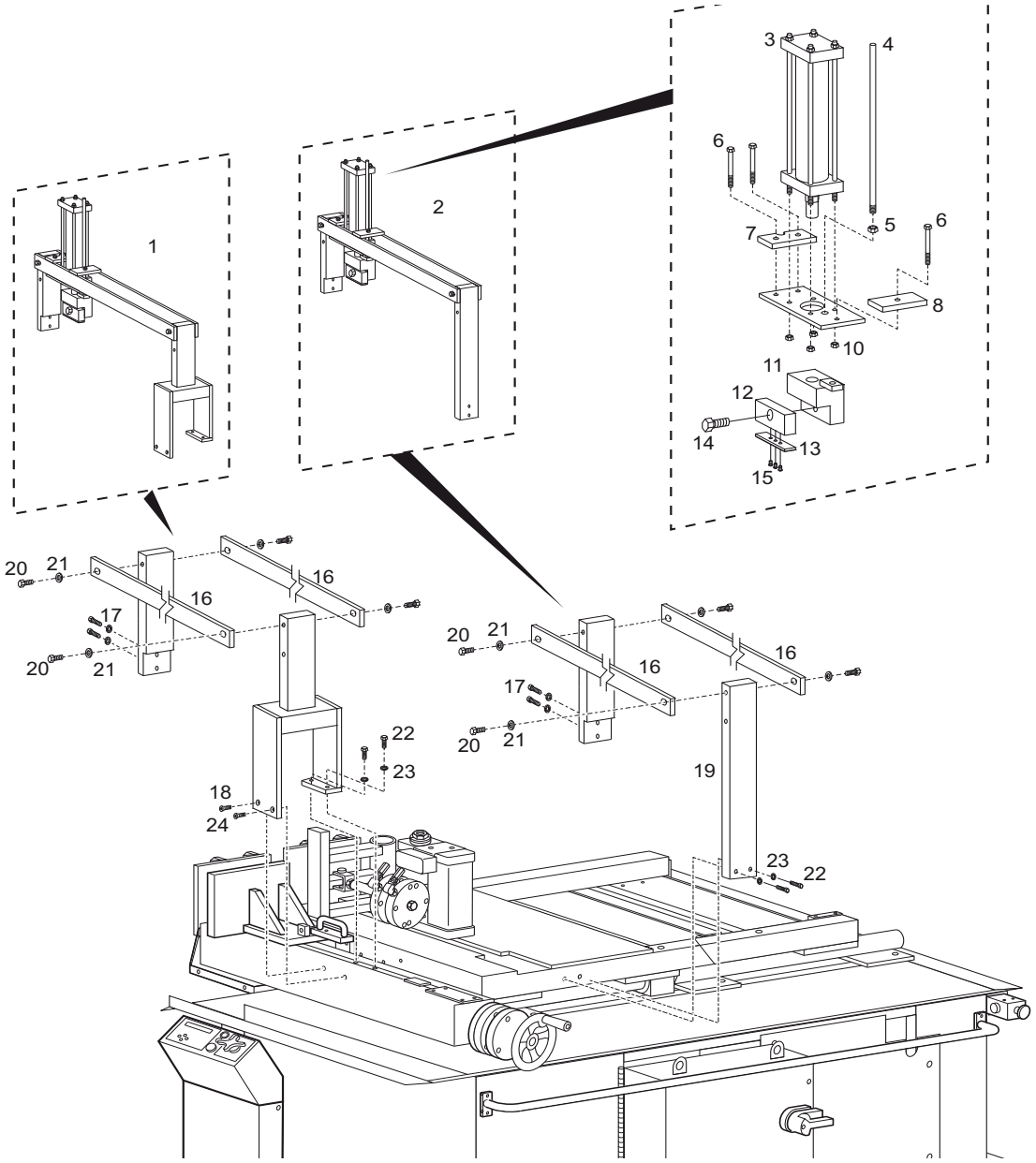

1	156216	Hold Down Clamp Assembly	13	156236	Hold Down Facing
2	156239	Hold Down Clamp Assembly	14	100004-125	Cap Screw, HH, 3/4-16 x 1-3/4
3	099010-014	Clamp Cylinder	15	100013-008	Cap Screw, BH, 1/4-20 x 3/8
4	156229	Guide Post	16	156232	Horizontal Support
5	100019-003	Hex Jam Nut, 1/2-13	17	156230	Vertical Support
6	100004-052	Cap Screw, HH, 3/8-16 x 3-1/2	18	156221	Vertical Support
7	156228	Cylinder Clamp Block	19	156231	Vertical Support
8	156227	Cylinder Clamp Block	20	100004-035	Cap Screw, HH, 1/2-13 x 1
9	156233	Cylinder Plate	21	100030-007	Washer, Flat, 1/2
10	100019-025	Hex Jam Nut, 5/16-24	22	100004-027	Cap Screw, HH, 3/8-16 x 1
11	156238	Guide Post Block	23	100025-003	Washer, Lock, 3/8
12	156235	Hold Down Bar	24	100009-006	Cap Screw, FH, 3/8-16 x 1

Control Station

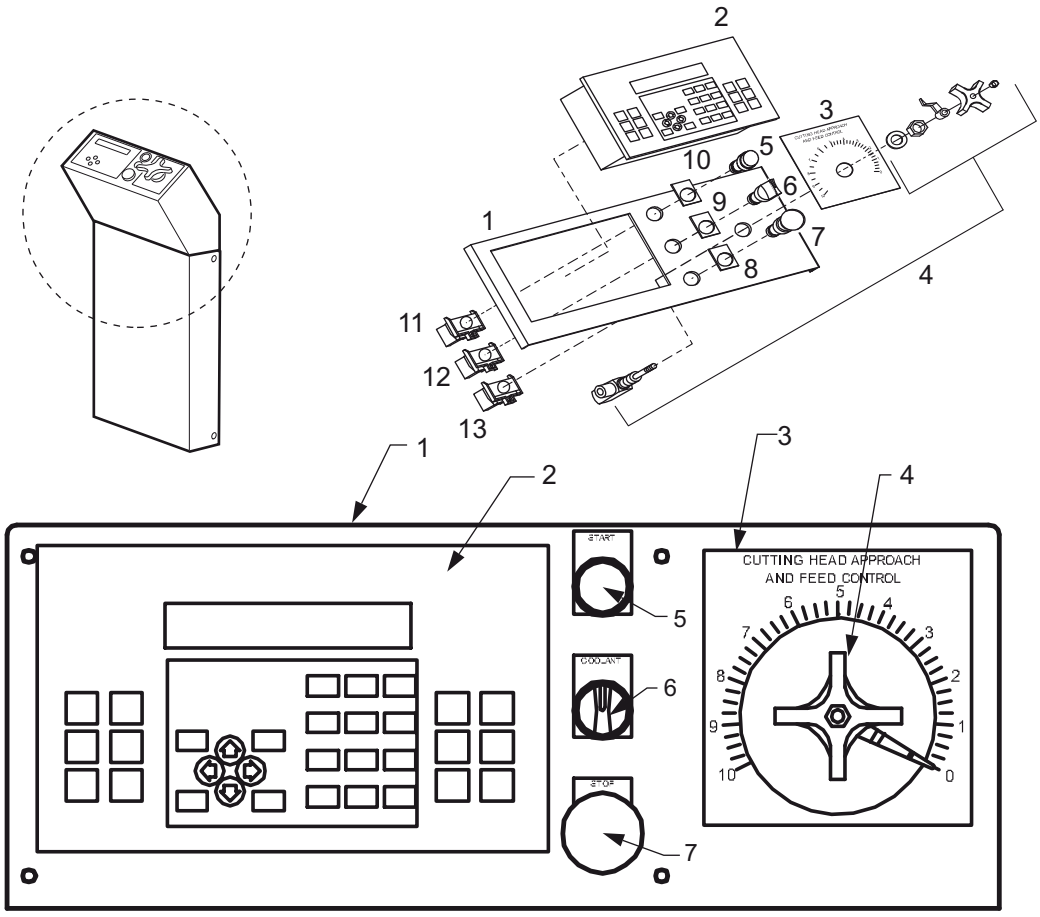

1	156066	Console Cover	8	100699-102	Legend Plate, Emergency Stop, Red
2	100912	Operator Terminal	9	100699-128	Legend Plate, Coolant
3	156180	Legend Plate	10	100699-127	Legend Plate, Master Start, Green
4	100238-005	Control Valve Assembly	11	100871-030	Contact Block w/Base, N/O
5	100871-029	Push Button, Green	12	100871-023	Contact Block w/Base, N/O - N/O
6	100871-031	Selector Switch, 3 Way, Maintain	13	100871-005	Contact Block w/Base, N/C
7	100871-021	Mushroom Head, Twist to Release, Red			

Hydraulic/Pnuematic Schematic

HYDRAULIC SCHEMATIC

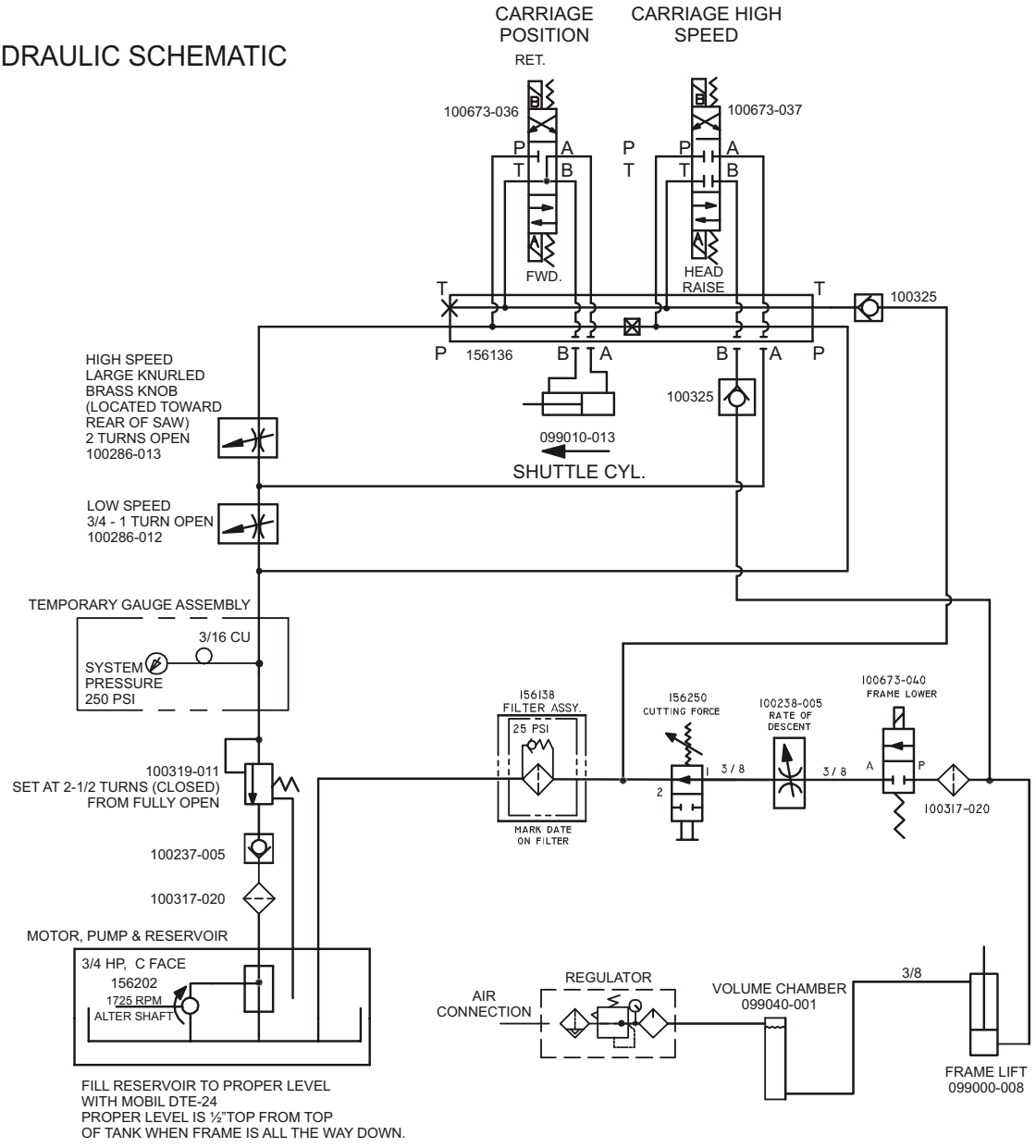

PNEUMATIC SCHEMATIC

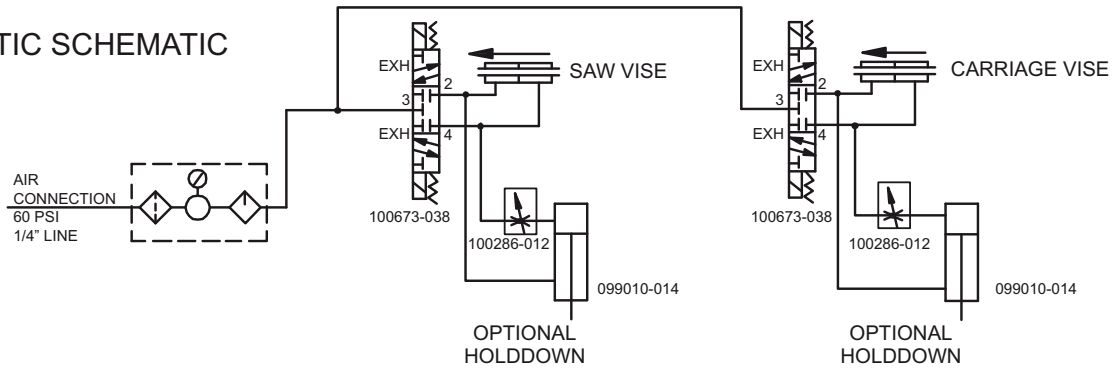

Electrical Controls Main Panel

FUSES		
NUMBER	DESCRIPTION	AMP
FU 1	DISCONNECT LEG 1	15
FU 2	DISCONNECT LEG 2	15
FU 3	DISCONNECT LEG 3	15
FU 4	TRANSFORMER	5
FU 5	WORKLIGHT	1
FU 8	COOLANT PUMP	3

208/230

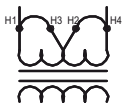

460

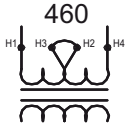

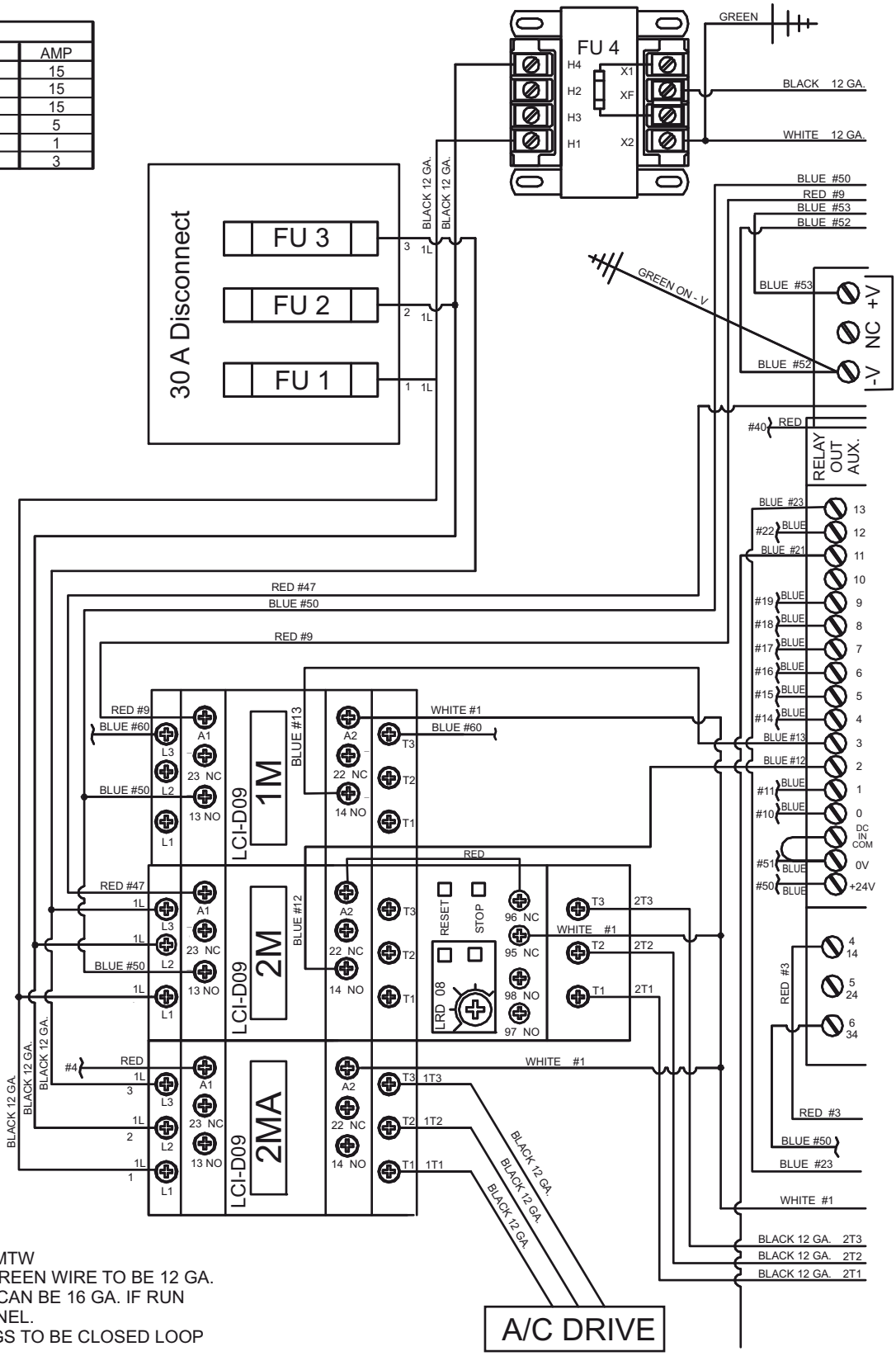

NOTE:
1) ALL WIRE TO BE MTW
2) BLACK, WHITE, GREEN WIRE TO BE 12 GA.
3) GROUND LEADS CAN BE 16 GA. IF RUN DIRECTLY TO PANEL.
4) ALL GROUND LUGS TO BE CLOSED LOOP WIRE ENDS.
5) RED, BLUE CONTROL WIRING TO BE 16 GA.

Electrical Controls Main Panel

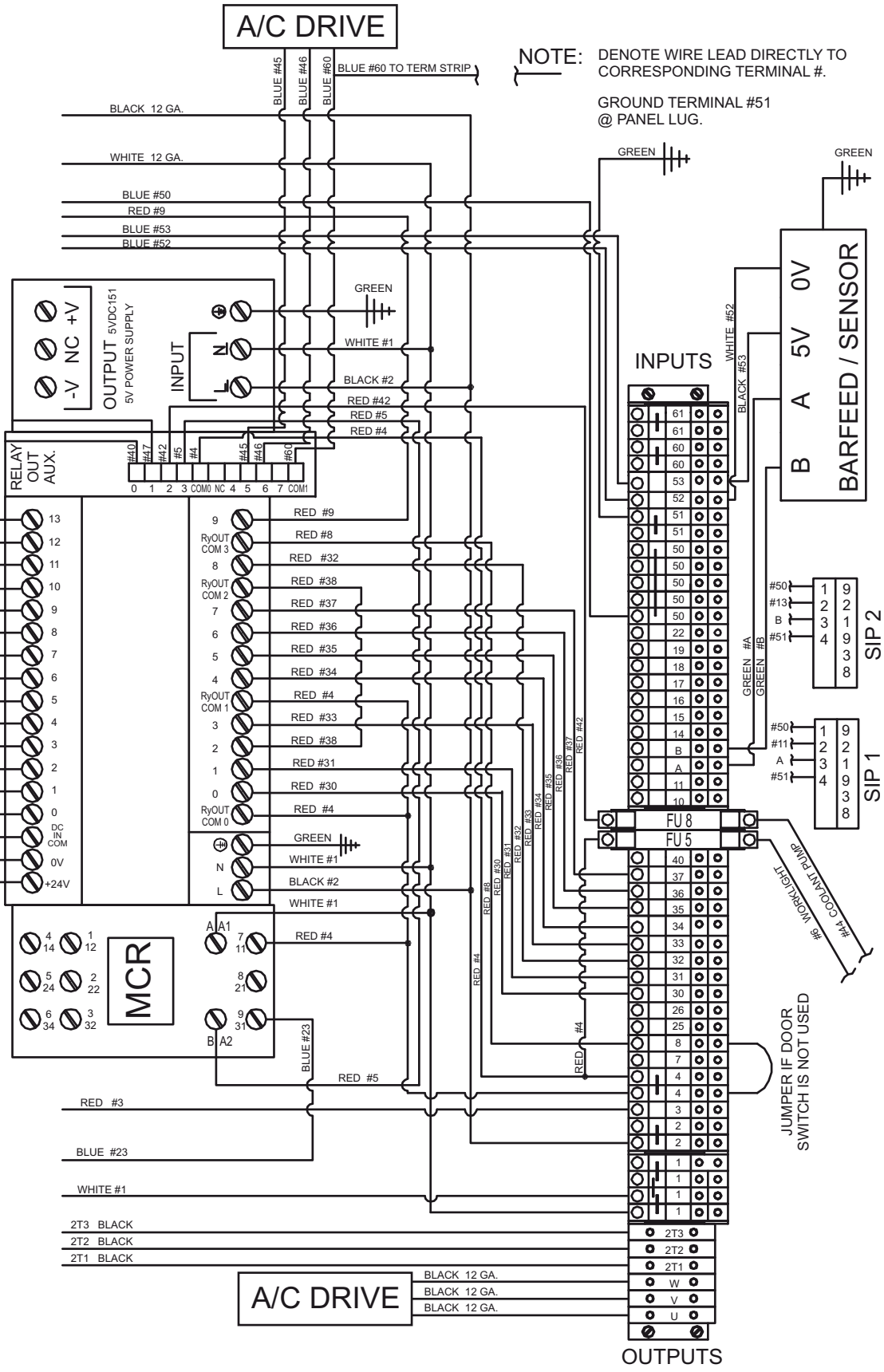

Electrical Controls

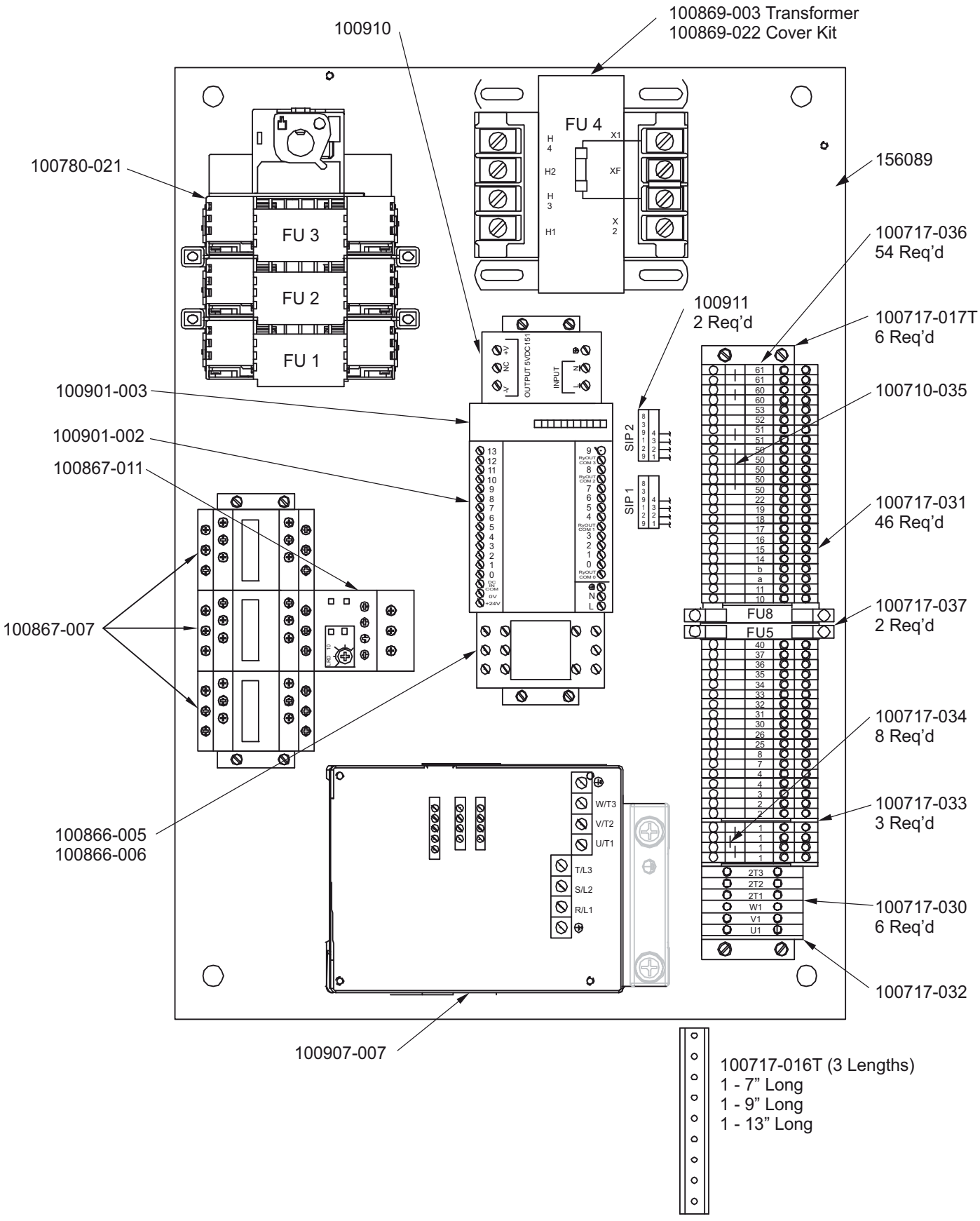

A/C Drive Set Up

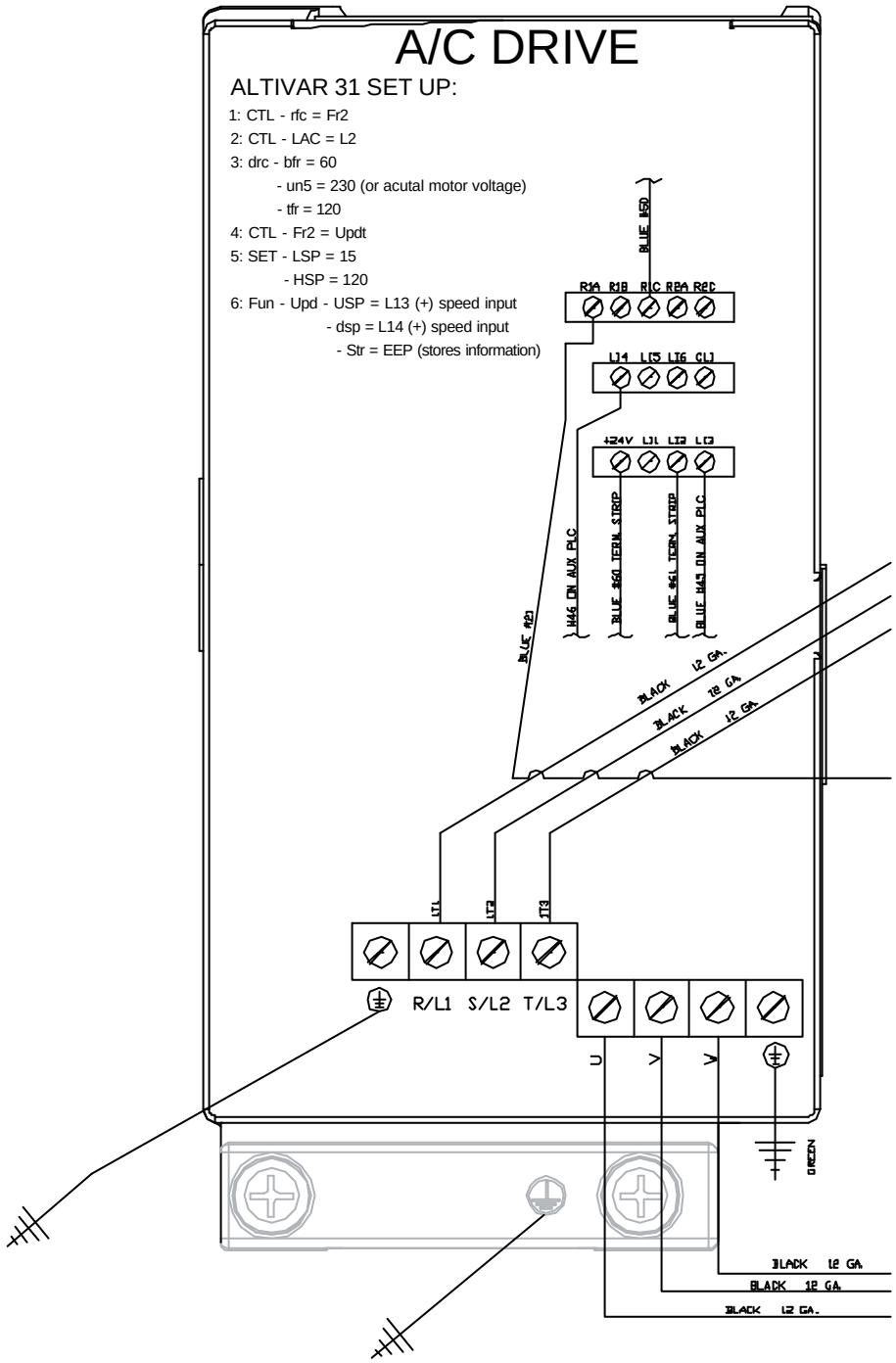

Electrical Controls

208 / 230 VOLT SHOWN

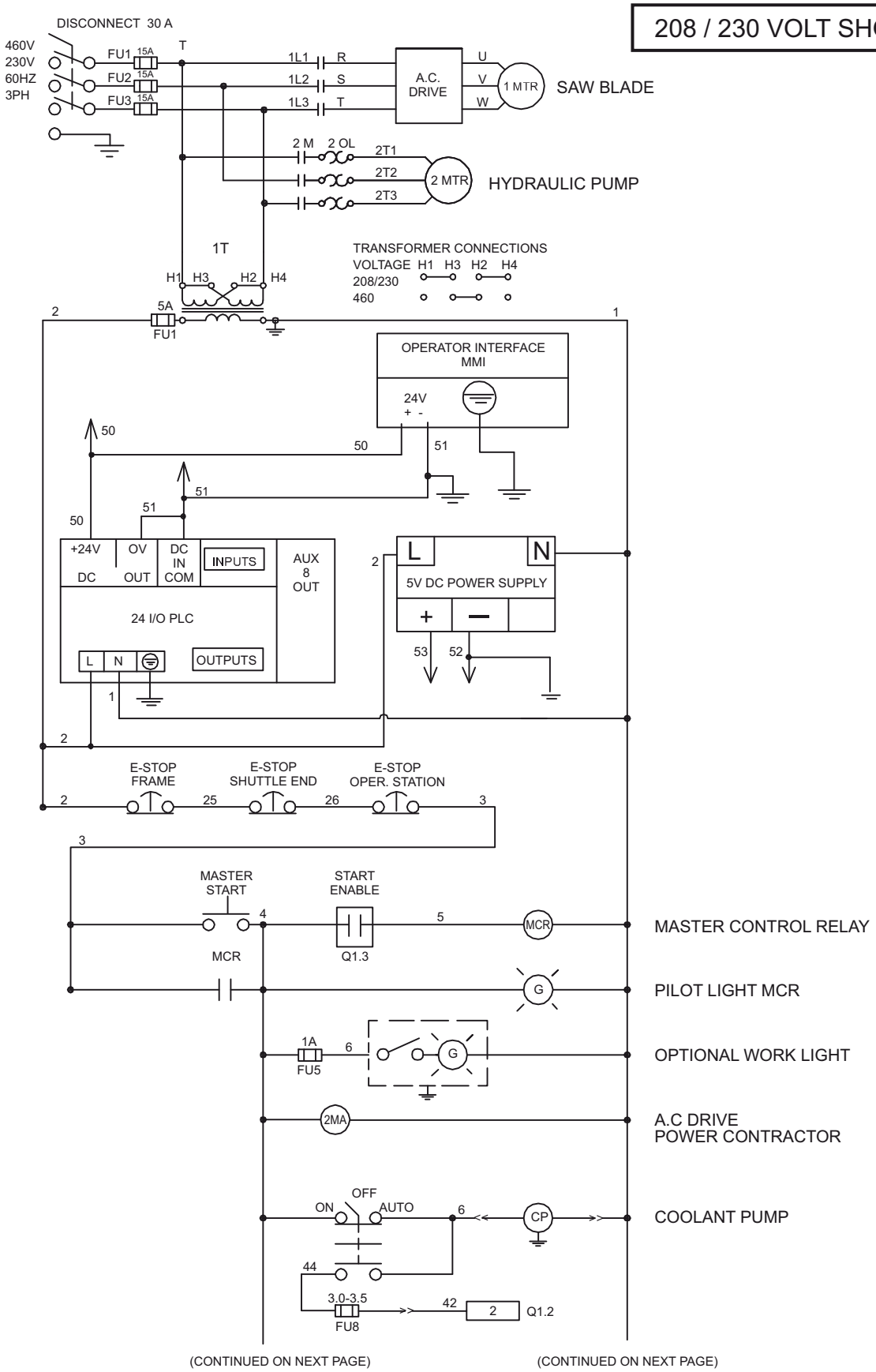

PLC INPUTS

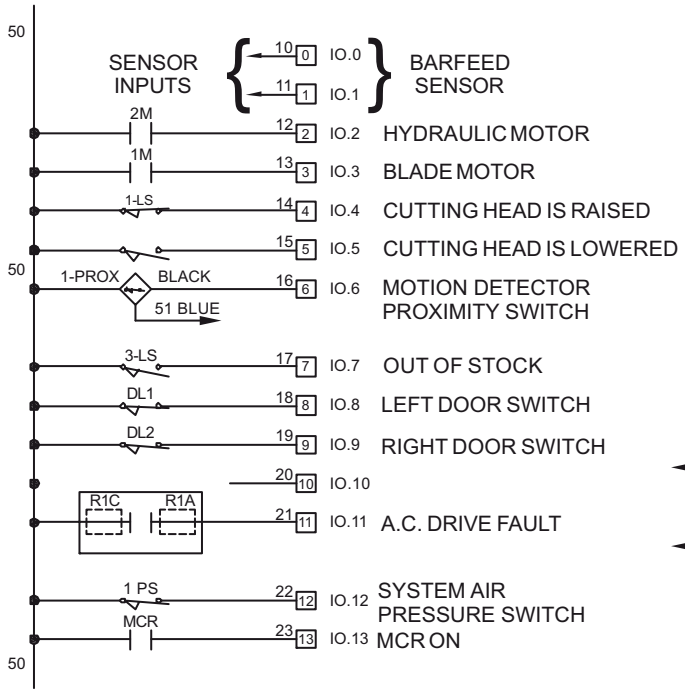

PLC OUTPUTS

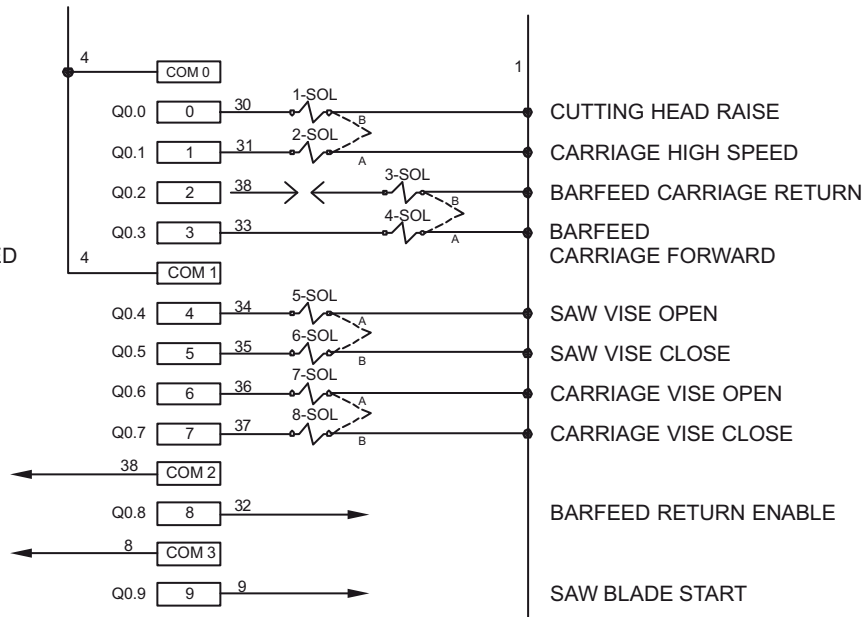

AUX OUTPUTS

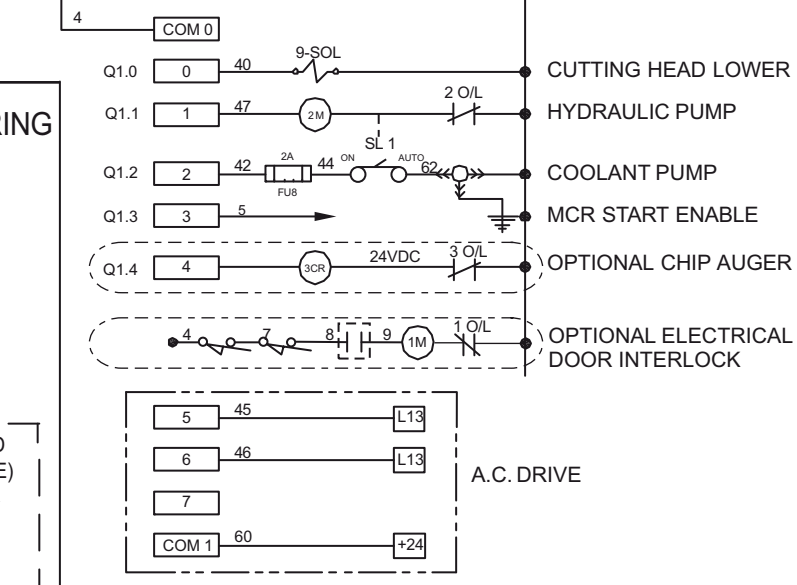

SENSOR WIRING

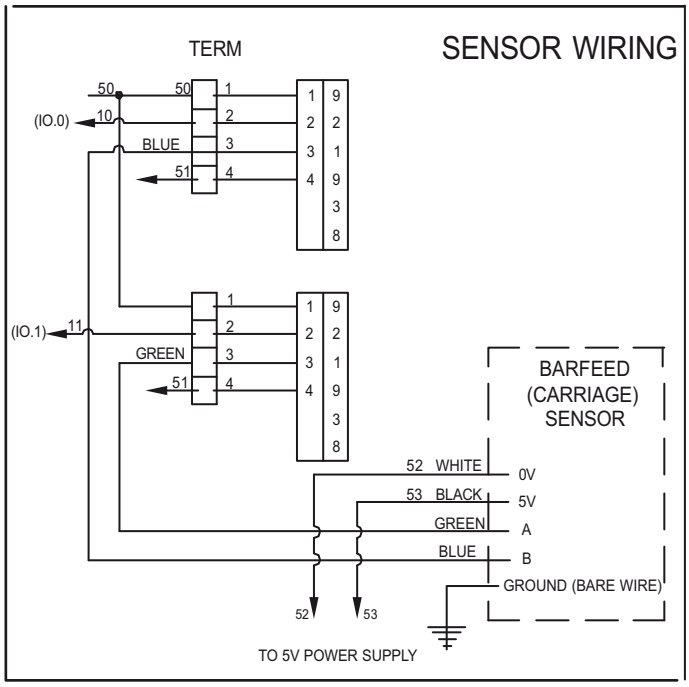

Wellsaw
MADE IN U.S.A.

Stock Dimensions Tooth Pitch	0 - 1" 10/14, 8/12		1" - 3" 8/12, 6/10, 5/8		3" - 6" 5/8, 4/6, 3/4, 3 Sabre		6"+ 3/4, 2/3, 2 Sabre, 1 Tooth, 3/4" T.S.	
Material (Annealed)	Blade Speed (SFPM)	Cutting Rate (SIPM)	Blade Speed (SFPM)	Cutting Rate (SIPM)	Blade Speed (SFPM)	Cutting Rate (SIPM)	Blade Speed (SFPM)	Cutting Rate (SIPM)
Carbon Steels								
1008-1013	250	8 - 10	275	9 - 12	280	12 - 15	250	9 - 12
1015-1018	250	8 - 10	275	9 - 12	250	12 - 15	230	9 - 12
1048-1065	200	5 - 7	200	5 - 7	175	8 - 10	150	6 - 8
1065-1095	200	4 - 6	200	5 - 7	150	6 - 8	120	6 - 8
Free Machining Steels								
1108-1111	300	9 - 11	330	12 - 14	275	13 - 15	220	11 - 14
1112-1113	300	8 - 11	330	11 - 13	275	12 - 15	220	12 - 15
1115-1132	300	7 - 11	330	10 - 13	275	13 - 16	220	11 - 14
1137-1151	275	6 - 8	250	8 - 10	250	8 - 11	200	7 - 10
1212-1213	300	8 - 10	320	11 - 13	300	13 - 15	255	11 - 14
Manganese Steels								
1320-1330	250	5 - 7	250	5 - 8	200	8 - 11	175	7 - 10
1335-1345	250	5 - 7	225	5 - 7	200	7 - 9	175	5 - 8
Nickel Chrome Steels								
3115-3130	260	4 - 6	260	5 - 7	230	5 - 7	225	5 - 7
3135-3150	220	4 - 6	200	4 - 7	180	6 - 8	150	5 - 8
3310-3315	200	3 - 4	180	4 - 5	180	5 - 7	160	4 - 6
Molybdenum Steels								
4017-4024	300	3 - 5	270	4 - 7	250	6 - 8	220	5 - 8
4032-4042	300	3 - 5	270	4 - 7	250	6 - 8	230	5 - 8
4047-4068	250	3 - 5	220	4 - 6	200	5 - 7	180	3 - 5
Chrome Moly Steels								
4130-4140	280	4 - 6	250	5 - 8	250	8 - 10	220	6 - 8
4142-4150	230	3 - 5	200	4 - 6	200	5 - 7	170	4 - 6
Nickel Chrome Moly Steels								
4317-4320	250	3 - 5	225	4 - 6	200	5 - 7	170	4 - 6
4337-4340	230	3 - 4	200	4 - 5	200	4 - 6	170	4 - 5
8615-8627	250	4 - 5	230	6 - 7	230	6 - 8	200	6 - 7
8630-8645	250	3 - 5	230	4 - 6	230	5 - 7	180	4 - 6
8647-8660	220	2 - 4	200	3 - 5	200	4 - 6	150	3 - 5
8715-8750	250	3 - 5	220	4 - 6	220	5 - 7	180	4 - 6
9310-9317	200	1 - 3	160	2 - 3	160	2 - 4	150	2 - 3
9437-9445	250	4 - 5	230	4 - 5	230	5 - 6	180	4 - 5
9747-9763	250	2 - 4	230	3 - 5	200	4 - 6	180	3 - 5
9840-9850	240	4 - 5	220	4 - 6	200	5 - 7	180	4 - 6
Nickel Moly Steels								
4608-4621	250	3 - 5	220	5 - 6	220	6 - 7	200	5 - 6
4640	220	3 - 5	200	4 - 6	200	5 - 7	170	4 - 6
4812-4820	200	3 - 5	180	3 - 5	180	4 - 6	160	4 - 5
Chrome Steels								
5045-5046	280	4 - 6	250	5 - 7	250	8 - 10	200	7 - 8
5120-5135	280	4 - 6	250	6 - 7	240	7 - 8	180	5 - 8
5140-5160	250	3 - 5	230	4 - 6	230	5 - 7	200	4 - 6
50100-52100	180	2 - 4	160	3 - 5	150	4 - 6	100	3 - 5
Chrome Vanadium Steels								
6117-6210	225	4 - 5	225	5 - 7	200	6 - 8	170	5 - 7
6145-6152	225	3 - 4	200	4 - 5	200	5 - 6	150	4 - 5
Die Steels								
A-2	210	2 - 3	200	3 - 4	190	3 - 4	180	2 - 3
D-2, D-3	110	1 - 2	100	1 - 2	90	1 - 2	80	1 - 2
D-7	90	1	80	1	70	1	70	1
O-1, O-2	240	3 - 4	210	4 - 5	190	5 - 6	170	4 - 5
O-6	230	3 - 4	200	4 - 6	180	5 - 7	150	4 - 6

Stock Dimensions Tooth Pitch	0 - 1" 10/14, 8/12		1" - 3" 8/12, 6/10, 5/8		3" - 6" 5/8, 4/6, 3/4, 3 Sabre		6"+ 3/4, 2/3, 2 Sabre, 1 Tooth, 3/4" T.S.	
Material (Annealed)	Blade Speed (SFPM)	Cutting Rate (SIPM)	Blade Speed (SFPM)	Cutting Rate (SIPM)	Blade Speed (SFPM)	Cutting Rate (SIPM)	Blade Speed (SFPM)	Cutting Rate (SIPM)
Silicon Steels								
9255-9260	200	2 - 4	180	3 - 5	180	3 - 5	150	3 - 5
9261-9262	200	1 - 3	160	2 - 3	160	2 - 4	150	2 - 3
High Speed Tool Steels								
T-1, T-2	130	1 - 2	110	2 - 3	100	2 - 4	90	2 - 3
T-4, T-5	110	1 - 2	100	1 - 2	90	2 - 3	80	1 - 2
T-6, T-8	110	1 - 2	100	1 - 2	80	1 - 2	70	1 - 2
T-15	80	1	80	1	70	1	50	1
M-1	150	1 - 3	140	2 - 4	130	3 - 5	110	2 - 4
M-2, M3	120	1 - 2	110	2 - 3	100	3 - 4	80	2 - 3
M-4, M-10	100	1 - 2	90	1 - 2	80	1 - 3	60	1 - 2
Hot Work Steels								
H-12, H-13, H-21	150	2 - 4	125	3 - 5	125	2 - 4	125	2 - 4
H-22, H-24, H-25	150	1 - 3	125	1 - 3	125	1 - 3	125	1 - 3
Shock Resisting Tool Steels								
S-1	220	2 - 4	180	3 - 5	165	3 - 5	150	2 - 4
S-2, S-5	170	1 - 3	150	3 - 5	120	2 - 4	100	1 - 3
Special Purpose Tool Steels								
L-6	200	2 - 4	180	3 - 5	170	3 - 5	150	2 - 4
L-7	200	2 - 4	180	3 - 5	150	3 - 5	100	2 - 4
Stainless Steels								
201, 202, 302, 304	120	2 - 4	100	2 - 4	100	2 - 4	100	1 - 3
303, 303F	140	2 - 4	120	2 - 4	100	3 - 5	100	2 - 4
308, 309, 310, 330	90	1	70	1	60	2	60	1
314, 316, 317	90	1	80	1	70	2	60	1
321, 347	130	1 - 3	110	1 - 3	100	2 - 4	80	1 - 3
410, 420, 420F	150	1 - 3	130	1 - 3	120	2 - 4	100	1 - 3
416, 430F	200	3 - 5	180	4 - 6	170	5 - 7	150	4 - 6
430, 446	100	1 - 3	90	2 - 4	80	2 - 4	80	1 - 3
440 A,B,C	120	1 - 3	10	1 - 3	90	2 - 4	70	1 - 3
440F, 443	150	1 - 3	130	1 - 3	120	2 - 4	100	1 - 3
17-4PH, 17-7PH	100	2 - 3	90	2 - 4	80	3 - 4	80	2 - 3
A-7	100	1 - 2	100	1 - 2	100	2 - 3	100	2 - 3
Beryllium Copper #25								
BHN 100-120	350	4 - 6	300	5 - 7	275	6 - 8	225	5 - 7
BHN 220-250	250	2 - 4	225	3 - 5	200	3 - 4	175	3 - 5
BHN 310-340	200	1 - 2	160	1 - 2	140	2 - 3	100	1 - 2
Nickel Base Alloys								
Monel	100	1 - 2	100	1 - 2	80	1 - 2	60	1
R Monel	140	2 - 3	140	2 - 4	125	2 - 4	75	2 - 3
K Monel	100	1	80	1	60	1	60	1
KR Monel	100	1 - 3	90	1 - 3	80	1 - 3	60	1 - 2
Inconel	110	1 - 2	100	1 - 3	80	1 - 3	80	1 - 2
Inconel X	90	1	80	1	70	1	60	1
Hastelloy A	120	1 - 2	100	1 - 2	85	2 - 3	75	1 - 2
Hastelloy B	110	0 - 1	100	1 - 2	90	1 - 2	75	0 - 1
Hastelloy C	100	0 - 1	90	0 - 1	70	0 - 1	60	0 - 1
Rene 41	90	1	90	1	90	1 -2	90	1 - 2
Udimit	100	1	90	1 - 2	90	1 - 2	90	1 - 2
Waspalloy	90	1	90	1 - 2	90	1 - 2	90	1 - 2
Titanium	100	1 - 2	100	2 - 3	100	2 - 3	100	2 - 3
Titanium Alloys								
TI-4AL-4MO	100	0 - 1	90	0 - 1	80	0 - 1	70	0 - 1
TI-140A2CR-2MO	100	0 - 1	90	0 - 1	80	0 - 1	60	0 - 1

The Original.....Since 1926

Wellsaw®

Made In The USA

Quality Metal Cutting Bandsaws

2829 N. Burdick St.
Kalamazoo, MI 49004
Phone: 269-345-1132
Fax: 269-345-0095
website: www.wellsaw.com
email: parts@wellsaw.com