STARTING SERIAL NUMBER 1958

MODEL 1270

METAL CUTTING BANDSAW

OPERATORS MANUAL

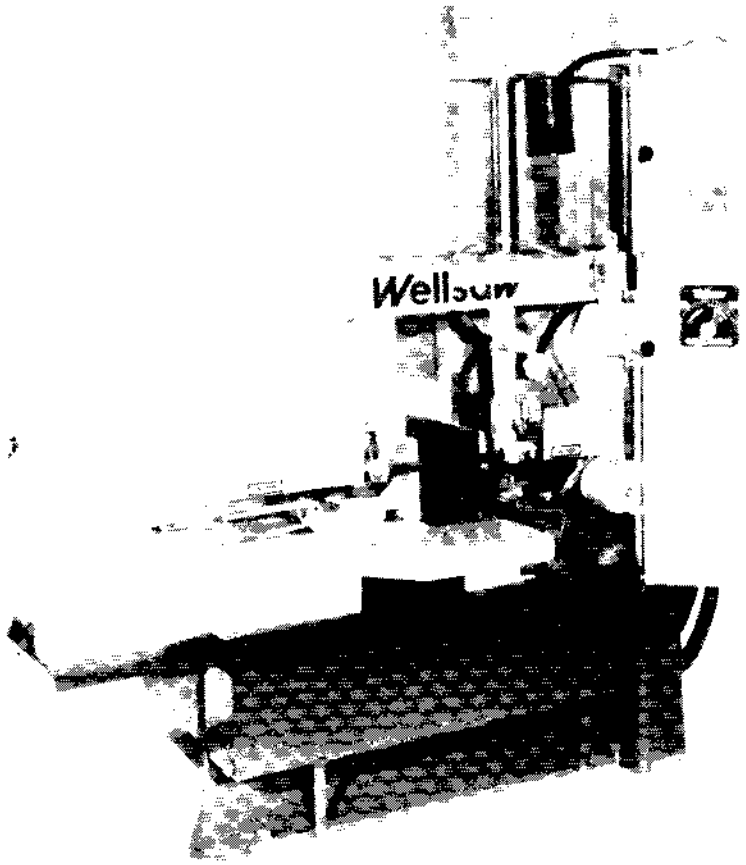

PLEASE READ THIS MANUAL CAREFULLY
IT WAS PREPARED TO HELP YOU

The 1270 was designed and manufactured to conform to traditional high standards of performance. Each 1270 must pass a series of final inspection tests, including actual metal cutting operations before it is shipped. For this machine to provide satisfactory service, it is necessary that it be properly installed, operated and maintained. This manual has been prepared to assist you in carrying out these functions. We urge you to study the manual and follow these suggestions.

Wellsaw® | 2829 N. Burdick, Kalamazoo, MI 49004
Phone: 616-345-1132 • Fax: 616-345-0095

AS OF AUGUST 1 2002
NEW AREA CODE
269

Index

GENERAL INFORMATION

PART NUMBERS

DRAWINGS

Specifications

Capacity

Rounds 12 3/4

Rectangular ..... 12"x16", 11"x18"

Swivel Vise

450 angle capacity ..... 7 1/2"x7 1/2"

Motor Sizes

Blade Drive ..... 3 HP

Hydraulic System ..... 1/2 HP

Selective Speed Range 60, 115, 200, 300

Blade Size ..... 13'6"x1"x.035"

Bed Width ..... 12 1/4"

Floor to top of Bed ..... 24 1/4"

Base Area ..... 29"x48"

Overall Size

W x L x H ..... 47"x78"x63"

Wet Cutting System

Chip pan ..... 50"x20 1/2"x 1 1/2"

Fluid tank ..... 36"x6"x8 3/4"

Fluid capacity ..... 6 gals.

Pump ..... Submersible type

System includes screened intake, splash guards, fluid nozzle, flow control valve.

Shipping Weights

. Model 1270 ..... 2100 lbs.

. Model 1270A ..... 2700 Lbs.

Parts Ordering

For your convenience:
When contacting your Wellsaw supplier or the Company for parts or service, it is essential that you have both your saw Serial Number and Purchase Date available. Jot them down here for handy reference.

Serial Number _____

Purchase Date _____

Fill out and return your Warranty Card so that you can be kept informed of developments concerning your Wellsaw.

Forward

The Model 1270 and 1270A Wellsaws have been designed and manufactured to conform to Wellsaw's recognized high standards of quality and performance. Each saw must pass a series of final inspection tests, including actual metal cutting operations, before it is shipped. For this saw to provide satisfactory service, it is necessary that it be properly installed, operated and maintained. This manual has been prepared to assist you in carrying out these functions. We urge you to study this manual and follow its suggestions.

Receiving and Installation

Uncrating

Carefully remove the protective crating and skid so the saw and its parts are not marred or otherwise damaged.

Shortages

Inspect the complete shipment carefully against the itemized packing list. Make sure that all items are present and in good condition. In the event of any shortage, notify the distributor from whom you purchased the saw and the carrier who made delivery.

Utility Hook-Up

The use of a qualified electrician is always recommended when connecting the saw to the main power supply. Electrical codes differ from area to area and it is the customers responsibility to ensure that his saw complies with applicable codes. Your Wellsaw is prewired at the factory for a specified voltage. Always check the motor and electrical panel to ensure that they are both wired to correspond to your electrical power supply.

Safety Rules

1. Know Your Saw
Read this manual carefully. Learn your saws' application and limitations as well as the potential hazards peculiar to this machine.

2. Keep Guards in Place
Keep guards in place and in good working order.

3. Remove Adjusting Keys and Wrenches
See that keys and wrenches are removed from the saw before operating it.

4. Keep Working Areas Clean
Clutter invites accidents

5. Avoid Dangerous Environment
Do not use power tools in damp or wet locations. Keep work areas well lighted.

6. Keep Children Away
Keep all visitors a safe distance from work areas.

7. Use The Right Tools
Do not force a tool or attachment to do a job or operate at a speed it was not designed for.

8. Wear Proper Apparel
Avoid all loose clothing or jewelry which may get caught in moving parts.

9. Use Safety Glasses
Also use a face or dust mask if the cutting operation being performed requires it.

10. Secure Work
Use proper clamps or the vise to hold work before cutting.

11. Do Not Over Reach
Keep your footing and balance at all times. Clean up all liquids spilled in work area.

12. Maintain Tools in Top Condition
Keep tools sharp and clean for best and safest performance. Follow instructions for lubrication, maintenance and changing accessories

13. Disconnect Power
Before servicing and when changing accessories such as blades, disconnect the power supply.

14. Use Recommended Accessories
Consult this Manual. The use of improper accessories may be dangerous and can damage the saw.

15. Hydraulic System
When working on hydraulic circuits, the frame must be in the extreme down position or mechanically blocked as the frame is always under pressure.

Start Up

Upon receipt of machine, uncrate and check all parts. In case of loss or damage, file Proof of Loss Claim with carrier.

Remove rust preventive from vertical posts using mineral spirits. Coat with light oil.

Attach tip-off block on cut-off side of machine so that it is about 1/64" below saw bed level.

Connect machine to power line.

NOTE: Check motor direction!
Blade travels in a clockwise direction.

Remove wood blocking underneath cutting head as follows:

1. Pull outward on EMERGENCY STOP button to energize control circuit.

2. Press RAISE button, which starts pump motor, thereby raising the cutting head. When the head is raised off the blocking, push STOP button, and remove blocking.

The quantity of oil in the hydraulic system tank should now be checked as follows:

3. Press FEED button, and turn indicator head slowly counter- clockwise, allowing cutting head to descend gradually. Just before the limit switch rod collar contacts the lower limit switch, press the STOP button, preventing further descent. Remove the cover plate at the back of the base. The proper oil level is 1" from the top of the tank and is checked by removing thefill plug.

IMPORTANT:
OIL LEVEL SHOULD BE CHECKED ONLY WHEN CUTTING HEAD IS AT ITS LOWEST EXTREMITY. IF NECESSARY TO ADD OIL, USE MOBIL DTE 25 HYDRAULIC OIL OR EQUIVALENT

BLEEDING THE HYDRAULIC SYSTEM OIL LINE

The hydraulic system tank is filled to operating level at the factory on domestic shipments only, but is drained when packed for export. After refilling the tank, it may be necessary to "Bleed" the line, removing all air. Raise the head and slide the lower limit switch rod collar upward and secure. Remove the frame stop bolt which is located on the base directly under the frame yoke. Press LOWER button and lower frame gently all the way to the bottom of the cylinder stroke. Then raise the cutting head and repeat two or three more times, thus removing the air from the system. Raise the cutting head and replace the frame stop bolt and the lower limit switch rod collar in their original positions.

General Information

The cutting head, or frame, of the Model 1270 is raised and lowered by the hydraulic unit in the base, consisting of a rotary pump, tank, cylinder, and piston, solenoid valve and needle valve.

Working in conjunction with this assembly are the electrical units composed of the control cabinet, front mounted controls, limit switches, blade micro switch, pump motor (1/2 H.P.), and blade drive motor (3 H.P.)

HYDRAULIC SYSTEM

1. PUMP - Positive displacement, rotary type. Forces oil into lifting cylinder.

2. TANK - should contain SIX quarts of Mobil DTE 25 Hydraulic Oil or equivalent

3. CYLINDER & PISTON - brass cylinder, steel piston with neoprene cup.

4. SOLENOID VALVE - Regulates flow of oil through line as blade pressure increases and decreases, actuated by blade micro switch.

5. NEEDLE VALVE - Governs discharge of oil from cylinder as frame lowers.

ELECTRICAL SYSTEMS

1. CONTROL CABINET - Contains transformer to provide 110 volts to all controls, magnetic starters with heater coils, relay and terminal blocks.

2. LIMIT SWITCHES - **Upper limit switch** stops upward travel of cutting head at predetermined height set by trip collar. **Lower limit switch** stops blade motor at end of cut and starts pump to raise frame automatically to upper position.

3. BLADE MICRO SWITCH - An automatic device actuated by pressure on the blade and controls the solenoid valve.

4. PUMP MOTOR - 1/2 H.P.

5. BLADE DRIVE MOTOR - 3 H.P. "V" belt drive to gear case.

6. FRONT MOUNTED CONTROLS - Push buttons for blade motor, feed, emergency stop.

Operating Instructions

1. Remove wheel covers and install blade. Be sure that teeth on cut-off side are pointing toward idler end of machine. This is the proper direction of blade travel through cutting area.

2. Raise frame by pressing RAISE button which starts the hydraulic pump. When frame reaches a position so that the blade is about 1/2" above stock to be cut, push STOP button which will stop and hold the frame at this point.

3. Move upper set collar to desired height on control rod and lock in position with thumb screw. Upon completion of the cut, the lower limit switch will operate and the frame will automatically raise and stop at this predetermined position.

4. Place stock in vise in approximate cutting position. Press LOWER button to lower the frame. If more rapid traverse in lowering the frame is desired, this can be accomplished by turning the indicator head in a counter-clockwise direction. When blade is about 1/8" above stock, press LOWER stop button, stopping and holding the frame. Measuring from blade tooth, adjust stock to exact cutting position and tighten vise. During cutting, ALWAYS KEEP INDICATOR HEAD WITHIN LIMITS as shown on the dial.

5. With stock in proper position for cutting and clamped in vise push BLADE START button to start blade drive motor and then push LOWER button, which energizes blade micro switch and solenoid valve circuit. The machine will then start its controlled cutting action. This circuit will be de-energized when lower position is reached at the end of the cut. This action is controlled by the lower limit switch which also starts the hydraulic pump, automatically returning the saw frame to a position as determined by upper set collar.

6. When cutting begins, notice the action of the blade micro switch located in casting above blade. In case of excessive feed, the tension of the spring is quickly overcome. The excessive pressure on the blade raises the stem linkage that operates the blade micro switch which closes the solenoid valve. This stops the downward travel of the saw frame. As the cutting action of the blade removes material to relieve this excessive pressure, the micro switch will function and open the solenoid valve for an instant until pressure again becomes excessive. This can be readily noticed by the operator due to the jumpy action of the saw frame exerting excessive pressure on the blade as the solenoid valve opens and closes.

Decrease feed at indicator head until cutting and feed are equalized. Insufficient feed is easily recognized as the blade will do very little cutting, if any, due to the lack of cutting pressure.

When correct feed is being employed, the blade will cut steadily and the micro switch will function occasionally to open and close the solenoid valve. The amber light on the top of the front mounted control box indicates that the saw is feeding. When the solenoid valve closes, the light goes out.

After a correct feed has been established, the position of the indicator head should be noticed, and this location maintained while cutting similar size and type material. Always keep the indicator head WITHIN CUTTING LIMITS, as shown on dial, during actual cutting operations.

We call your attention to the adjusting knob on the blade micro-switch assembly. While it may be necessary at times to adjust the spring pressure when radically different materials are to be cut, for instance, from bar stock to thin wall tubing, the operator should not make a habit of changing it casually.

As the spring is compressed, more pressure must be exerted against the blade before the micro switch functions. The micro switch spring controls the pressure against the blade and considerable discretion should be used before making any change.

During the cutting cycle, when frame is in downward travel, all operations can be stopped immediately by pressing LOWER and SAW STOP buttons or EMERGENCY STOP button. When in upward travel, this can be accomplished by pressing the STOP button.

BLADE GUIDES

The blade guides are arranged to hold the blade in alignment both vertically and horizontally.

Before making any adjustments, always try a new blade to be sure that the old blade was not causing the difficulty. **(See Blade Guide Alignment)**

BLADE BRUSHES

Brushes should be cleaned frequently in kerosene and reversed to take advantage of both rows of bristles.

For best results, replace worn, filled or sticky brushes with new ones. In bolting brushes to angles, be sure wire bristles are bent in same direction blade travels.

BLADE TEETH

Blades for the Model 1270 are furnished in 6, 8, 10 and 14 teeth per inch. Six or eight teeth per inch blades should be used when solid stock from 1-1/2" and up are being cut continuously. If cutting is first of thin stock and then heavier stock, blades with a 10 or 14 teeth per inch should be used.

Fourteen teeth per inch blades should always be used on cast iron and on thin walled stock.

Special purpose blades are also available.

SPEED SELECTION

Saws are equipped with step pulleys, which provide selection of speed ranges.
Use the fast speed to cut thin walled metal, tubing, thin channels, aluminum, thin brass, or any metal that will not burn the teeth. Use the medium speeds on general cutting, such as cold rolled, machine steels, heavy channels, etc. Use the slow speed for cutting nickel steels or any metals which require a slow speed on a lathe. Brass should always be cut with a blade which has not previously cut other metal.

If teeth wear off unusually fast, use slower speed. ALWAYS KEEP THE BLADE TIGHT AND FLUSH AGAINST THE FLANGE OF THE BAND WHEELS.

BELT

Usually the weight of the motor holds the belt tight enough, but in case it does not, the square head set screw on the motor bracket should be tightened.

SLIDING VISE JAW

The sliding vise jaw is equipped with a ratchet and ratchet dog for quick action and with a hand wheel for tightening work in vise. Excessive pressure is not required to hold material securely in the vise.

FIXED VISE JAW

The two pins in the fixed vise jaw should be kept in place in order to ensure square cuts. When cutting angles, these pins must be removed and the vise jaws turned to desired position and tightened with clamp bolts. The sliding vise should be loosened and pushed against fixed vise jaw and then tightened.

The pins enable operators to quickly relocate fixed vise jaw for 90 degree cutting. For final adjustment, the vise jaw should be squared with the saw blade, after the blade has been squared to the bed of the saw.

Preventive Maintenance

The proper performance and service life of every machine depends on how well it is maintained. The following should become a regular routine of operations.

1. Clean & Lubricate Exposed Surfaces

A. Wipe exposed surfaces free of dirty oil, chips and dirt.
B. Apply a thin coat of oil, Symbol 2190TEP, to machined surfaces.

2. Apply Lubrication Through Zert Fittings

A. De-energize circuit. Tag "OUT OF SERVICE".
B. Clean lubrication fittings.
C. Inject one stroke of grease, LUBRIPLATE GREASE 130-A, through fittings provided.

PART	# OF FITTINGS
Vertical Post Rollers	8
Stock Stop Bar	2

D. Remove excess lubrication.

CAUTION: DO NOT OVER-OIL VARIABLE SPEED PULLEY. EXCESS OIL WILL COAT BELT AND CAUSE SLIPPAGE.

E. Remove safety tag. Energize circuit.

3. Inspect Gear Case Lubricant

A. De-energize circuit. Tag "OUT OF SERVICE".
B. Remove gearcase cover.
C. Brush a small amount of QMI SERIES 11000 TEFLON GREASE on the gears.
D. Remove excess lubricant.
E. Reinstall gearcase.
F. Remove safety tag. Energize circuit.

4. Inspect Hydraulic Oil Level

A. De-energize circuit. Tag "OUT OF SERVICE".

WARNING:
CUTTING HEAD SHALL BE AT LOWEST EXTREMITY WHEN INSPECTING OIL LEVEL

B. Remove fill plug.
C. Inspect oil level. Proper oil level is 1" from top of tank.
D. Reinstall fill plug.
E. Remove safety tag. Energize circuit.

5. Clean Coolant Reservoir

A. De-energize circuit. Tag "OUT OF SERVICE".
B. Remove reservoir drain plug and drain coolant.
C. Remove and clean chip pan when installed.
D. Remove residue, sediment, and sludge from reservoir.
E. Clean coolant channel to the pump.
F. Reinstall drain plug and chip pan.
G. Fill coolant reservoir to operating level.
H. Remove safety tag and energize circuit.
I. Return cooling systems to normal operation.

6. Inspect Flexible Hoses & Fittings

A. Inspect hoses for cracks, breaks and deterio ration.
B. Inspect hoses for chafing or evidence of unusual wear.
C. Inspect fittings for tightness.

7. Inspect Drive Belt(s) For Wear

A. De-energize circuit. Tag "OUT OF SERVICE".
B. Remove covers for access to belt(s).
C. Inspect belt(s) for deterioration.
D. Depress belt(s) half-way between pulleys. Belt(s) should depress 1/2" to 3/4".

CAUTION:
BELT(S) THAT ARE TOO TIGHT WILL DAMAGE BEARINGS.

E. Remove safety tag. Energize circuit.

8. Provide Hydraulic Oil Sample For Analysis

A. De-energize circuit. Tag "OUT OF SERVICE".

NOTE:
CLEANLINESS OF TOOLS AND EQUIPMENT IS ESSENTIAL FOR PROVIDING TRUE SAMPLE

B. Operate machine 5-8 minutes to allow a true sample to be drawn after liquid is mixed; stop machine.
C. Fill sample bottle from hydraulic reservoir.
D. Tag sample bottle to identify equipment, and location.
E. Deliver to oil/water laboratory.
F. Renew hydraulic oil when one or more of the following limits is exceeded:

WATER:	0.001 %
SEDIMENT:	0.1 %
ACID TEST:	Indicates Positive

9. Clean Oil Line Screen

To clean hydraulic line oil screen, which is located in pipe tee on back of control panel, first place a 9" block between base and frame yoke at motor end. Lower frame to remove all pressure from hydraulic lines. The screen can then be removed and cleaned by unscrewing the hex nut.

10. Clean, Inspect & Lubricate Wheel Ball Bearing

A. De-energize circuit. Tag "OUT OF SERVICE".
B. Remove wheel covers.
C. Remove cutting blade.
D. Remove jamnut and hexnut.
E. Remove band Idler Wheel and Drive Wheel.
F. Remove ball bearing.
G. Clean ball bearing.
H. Clean Idler wheel and drive wheel hub.
I. Inspect ball bearing for rough turning and head discoloration.
J. Pack ball bearing with grease, VV-G-632, Type B, Grade 2.

K. Reinstall ball bearing.
L. Reinstall band idler wheel and drive wheel.
M. Reinstall hexnut and jamnut.
N. Repeat steps "D" through "M" for other wheel bearings.
O. Reinstall blade.
P. Reinstall wheel covers.
Q. Remove safety tag. Energize circuit.

11. Renew Hydraulic Oil

A. Lower head to full down position to facilitate draining of hydraulic reservoir.
B. De-energize circuit . Tag "OUT OF SERVICE".
C. Remove drain plug and drain oil.
D. Reinstall drain plug.
E. Remove filler cap.
F. Fill reservoir to proper level with oil, MOBIL DTE 25 Hydraulic Oil or equivalent.
G. Remove safety tag. Energize circuit.
H. Return saw to normal operating condition.

Periodic Inspection

Frequency

Weekly	1. Clean and lubricate exposed surfaces 2. Apply lubrication through Zert fittings. 3. Inspect RING GEAR lubricant. 4. Inspect hydraulic oil level
Monthly	1. Lubricate horizontal bandsaw.
Quarterly	1. Clean coolant reservoir. 2. Inspect flexible hoses and hose fittings.
Semi-Annually	1. Inspect drive belt(s) for wear 2. Provide hydraulic oil sample or analysis. 3. Clean, inspect and lubricate wheel ball bearing.
Annually	1. Sound & tighten foundation bolts.
As Required	1. Renew hydraulic oil.

NOTE: ACCOMPLISH WHEN DIRECTED AS A RESULT OF THE OIL ANALYSIS AND AFTER OVERHAUL

Adjustment & Repair

1. Repair Hydraulic Cylinder Packing

A. De-energize circuit. Tag "OUT OF SERVICE".
B. Remove gland bushing.
C. Inspect and replace packing, if required.
D. Reinstall gland bushing.
E. Remove safety tag. Energize circuit

2. Repair Hydraulic Check Valve

A. Position cutting head in lowest position on rest stop.
B. De-energize circuit. Tag "OUT OF SERVICE".
C. Remove end access door.
D. Disconnect tubing from check valve.
E. Remove and replace check valve.
F. Reinstall tubing and access door.
G. Remove safety tag. Energize circuit.

3. Repair Hydraulic Piston Assembly

A. Raise cutting head to highest position, and mechanically block in place.
B. Press LOWER and open FEED valve.
C. Push piston rod down one inch.
D. De-energize circuit. Tag "OUT OF SERVICE".
E. Loosen gland bushing and unscrew cylinder cap.
F. Lift out piston assembly.
G. Inspect and replace piston parts as required by removing nuts on bottom of piston assembly.
H. Reinstall piston assembly, cap and gland bushing taking care that cup is not damaged when inserted in cylinder.
I. Energize circuit.
J. Raise cutting head and remove blocking.
K. Cycle head up-down several times to bleed air from hydraulic system.
L. Remove safety tag.

4. Repair Pump or Filter

A. De-energize circuit. Tag "OUT OF SERVICE".
B. Remove side access door.
C. Disconnect cylinder pressure line.
D. Remove two front mounting screws and slide hydraulic unit forward.
E. Drain tank.
F. Replace pump or filter as required.
G. Replace oil, reinstall hydraulic unit and access door cover.
H. Remove safety tag. Energize circuit.

5. Repair Strainer, Magnetic Valve, Control Valve

A. Position cutting head at lowest extremity on rest stop.
B. De-energize circuit. Tag "OUT OF SERVICE".
C. Clean or replace strainer, or replace magnetic valve or control valve as required.
D. Remove safety tag. Energize circuit.

6. Adjust Wheel Pitch

A. De-energize circuit. Tag "OUT OF SERVICE".
B. Loosen blade tension.
C. Loosen and tighten opposing wheel pitching screws 1/2 turn as required to change blade tracking on wheel.
D. Re-tension blade.
E. Energize and run blade to verify that blade tracks on wheel properly, touching wheel flange but not rubbing.
F. Remove safety tag.

7. Adjust Blade Micro Switch

A. To check operation of the switch remove con trol cover (Item #20). Now turn off the feed valve and press the "Lower" button with the operation selector in setup. The lower light should be on. Depress the switch plunger and the lower light should go off.
B. If the "Lower" light did not go on when the "Lower" button was pushed, check to see if stud (Item # 15) is holding the switch plunger in.
C. If the stud is holding the switch plunger in, check for sticking mechanism then adjust the stud to activate the switch with .006 gap.
D. If the stud is not holding the switch plunger in and the "Lower" light does not come on when the "Lower" button is pushed, then the switch will need to be replaced. To verify this condi tion, check the switch with a continuity light.

Blade force settings are:

POSITION NO. 1	110 lbs. of force to close solenoid	
1-1/2	120	"
2	130	"
2-1/2	140	"
3	150	"
3-1/2	160	"
4	170	"
4-1/2	180	"
5	190	"
5-1/2	200	"

Adjusting Blade Guides

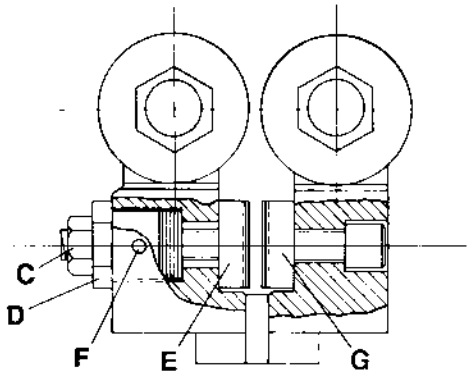

Figure 1

1. To adjust blade guide setting, loosen screw "F".

2. Turn nut and stem assembly "C" clockwise to verify full engagement of threads into guide "E". If threads are not fully engaged, item "C" will not turn. *Caution: Do not use excessive force when adjusting!!*

3. While holding nut and stem assembly "C" with a 1/2" wrench, turn adjusting nut "D" with a 3/4" wrench until spacing guides "E" and "G" are set to .038". Set screw "F" has a nylon tip to hold adjusting nut in place. Carbide guide "G" is stationary and requires no adjustment.

Blade Guide Alignment

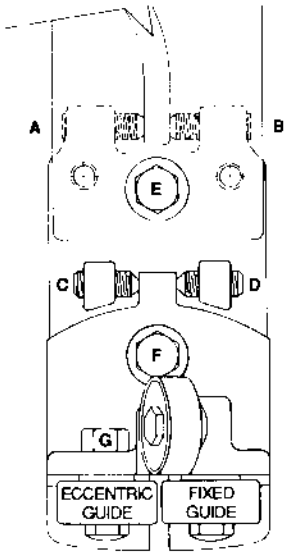

To properly align the saw blade for a straight and accurate cut, do the following.

1. Check the stationary vise jaw. Make sure it is square. To do this, place a combination square against the vise jaw slot in the saw bed. Slide the square toward the stationary vise jaw. Make the

necessary adjustment. If you then find the saw blade is not square with the stationary vise jaw, the blade must be adjusted.

2. This adjustment is made with the top two Allen screws on the roller adjusting block of the guide arm. Looking at the drawing, you will see these adjusting screws labeled "A" and "B".

3. To make a vertical adjustment of the saw blade, so that the cut is square from top to bottom, the blade must be set so that it is perpendicular to the bed. In making this adjustment, clean the saw bed first.

4. Set the rule of the combination square on the saw bed with the end of the rule butted against the blade above the set of the saw teeth. Use a 1-1/2 thousandths (.0015") shim and slide it along the top and the bottom edge of the rule where it meets the saw blade. If the shim slides between the blade and the rule at either the top or bottom, the roller supports must be adjusted by using the bottom Allen screws marked "C" and "D" to obtain the correct 90° angle.

Adjust the side roller guides until both rollers contact blade. When this adjustment has been made properly, the PATH OF THE BLADE IS STRAIGHT and the blade is not forced to curve around the rollers. The top roller guide should be in contact with the top of the blade at all times. When running idle, this contact pressure should be very light.

Replacing Gear Box

1. Unscrew motor post locking bolt.
2. Remove belt guard.
3. Take pulley belt off pulleys.
4. Remove gear case assembly mounting bolts and gear case will fall away from saw frame.
5. Remove driven pulley from gear case and install it on new replacement.

6. Reverse procedure for replacing new gear box.

NOTE:
MAKE SURE BOTH DRIVE & DRIVEN PULLEYS ARE ALIGNED BEFORE STARTING SAW

Gear Box Repair

1. Remove gear box from saw.
2. Remove four machine screws holding gear box together.
3. Separate gear box by carefully prying castings apart at location near pulley shaft.

CAUTION: DO NOT USE EXCESSIVE FORCE

4. Once the gear box is open, the internal parts may be inspected for wear.
5. Liquid plastic gasket is used to seal the gear case. (Locktite #51580)
6. Grease - TEXACO MARFAX 0 grease or equiva lent.

Adjusting Frame Limit Switches

1. Adjust the top actuating collar on the support rod to maximum height.
2. Raise the frame so that the teeth on the blade are approximately 1/2" above the material to be cut.
3. Raise the actuating collar until the collar moves the switch arm enough to activate the switch. When the contacts close you will hear the switch click.
4. Secure the collar in place at this point by tightening the thumb bolt in the actuating collar.
5. To set the lower limit, lower the frame until the teeth on the saw blade are 1/8" below the top surface of the convey or tip-off table.
6. Move the lower limit collar until the switch moves enough to activate the switch. When the contacts close you will hear a click and the frame will raise.

Trouble Shooting

1. Premature Dulling Of Bandsaw Teeth

A. Cutting rate too high or low. Check recom mendation.
B. Band speed too high or low. Check recommen dation.
C. Faulty material such as heavy scale, hard spots, etc.
D. Verify material analysis.
E. If coolant flow is not covering saw band, increase it.
F. Saw band vibrations will reduce band life.
G. Chipped or broken tooth lodged in cut.
H. Chip welding caused by improper feed and speed.
I. Wrong blade selection.
J. Wrong coolant or mixture.
K. Improper break-in of new blade. New blades should be run initially with reduced feed pressure.

L. Saw band teeth may be hitting guides. Check for proper blade size.

2. Vise Does Not Close

A. Selector switch in manual or automatic.
B. Check stock stop switch.
C. Check pulse switch, is it on limit?
D. Check versa valve.
E. Check vise limit switch.

3. Motor Overheating

A. Check for correct voltage.
B. Check voltage at switch.
C. Check voltage at motor.
D. Check for correct size heaters or bad heaters.
E. Check for loose connection at switch, motor and plug.
F. Check amp reading, does it correspond to motor rating.
G. Is motor wired correctly internally.
H. Is belt over-tightened (drive belt)?
I. Check for power drop during operation caused by use from other machines.

4. Saw Will Not Run

A. Correct voltage to saw. (Check rotation)
B. Check air pressure (80# maintained)
C. Emergency stop out.
D. Number on counter (counter functioning)?
E. Press raise button, frame should go up unless switch is on upper limit collar.
F. Check fuse on transformer.
G. Check reset on motor starters.
H. Is there power to hydraulic motor?
I. Is there power to drive motor?
J. Check for mechanical bind.

5. Machine Cycles Once In 'Auto' And Shuts Off At End Of Cut With Frame Up

A. Check for air leaks in line.
B. Inadequate air supply must have 80# main tained pressure.
C. Check pressure switch.

6. Saw Band Vibrations

A. Incorrect band speed for material.
B. Band tension incorrect.
C. Back-up bearing may be worn. Replace.
D. Incorrect choice of saw band pitch.
E. Incorrect coolant or mixture.
F. Incorrect feed setting.
G. Work piece not firmly clamped in vise.
H. Worn or improperly adjusted saw guide iserts. Check and make necessary adjustments.

7. Saw Band Teeth Chipping Or Ripping Out

A. Saw band pitch tool coarse. Use fine pitch saw band on thin work sections.
B. Improper break-in of new blade. DO NOT start new blade in old cut.
C. Work piece not held firmly enough. Clamp work securely.
D. If not using coolant, introduce it.
E. Faulty material such as hard spots.
F. Saw band gullets may be loading. Use higher viscosity lubricant or coolant.
G. Band speed and feed may need adjustment.

8. Premature Saw Band Breakage

A. Poor weld in band.
B. Feed rate set too high. Reduce it.
C. Excessive band speed. Make necessary ad justments.
D. Blade guides too tight or misaligned.
E. Band tension set too tight.
F. Blade running against flange on wheels.

9. Band Squeel

A. Feed rate too light for band speed. Increase feed rate and/or reduce blade speed.

10. Saw Band Slips Off Band Wheels

A. Band not tensioned correctly.
B. Wheel pitch not set properly.
C. Guides set too tight.

11. Gullets Of Saw Band Teeth Loading

A. Saw band pitch too fine. Use coarser pitch.
B. Saw band velocity too great. Reduce speed.
C. If not using coolant, apply it.

12. Chips Welding To Saw Band Teeth

A. Feed force too great. Reduce pressure.
B. Chip brush may be out of adjustment.
C. Check coolant and application.

13. Saw Band Becoming Scored

A. Saw guides are worn. Check and replace if necessary.
B. Too much pressure on saw guides. Make necessary adjustment.
C. Guides may be out of alignment.

14. Saw Band Making Belly-Shaped Cuts

A. Saw band tension too light. Increase it.
B. Saw guides too far from work piece. Adjust them closer to work.
C. Saw band pitch too fine. Use coarser pitch.
D. Feed force too heavy. Decrease it.

15. Inaccurate Cut-Off

A. Is conveyor level with saw?
B. Insufficient band tension.
C. Blade guide arms set too far apart. Always set guide arms as close to work as possible.
D. Blade may be dull. Check and replace.
E. Feed pressure set too high. Reduce feed.
F. Blade guides loose, worn or out of alignment.
G. Too many teeth per inch. Blade is not cutting freely.
H. Chip brush not cleaning teeth properly.
I. Dirty coolant.

16. Rough Cut/Poor Finish

A. Excessive speed or feed. Check recommen dation.
B. Blade is too coarse. Use finer tooth spacing.
C. Inadequate cutting fluid. Change.

17. Band Stalls In Work

A. Insufficient band tension.
B. Excessive feed pressure on soft materials.
C. Band tooth spacing too coarse.
D. Motor worn or defective.

Notes On Sawing

It is widely recognized that a proficient operator is a key to optimum performance in band sawing. He makes certain the machine is properly maintained and adjusted for dependable operation. He carefully sets up each cutting job to prevent damage to the machine and obtain the best performance of the equipment.

Some of the factors affecting cutting performance are: the blade, the material being cut, blade speeds and feeds, and accuracy required.

Experienced blade dealers can be very helpful in selecting the grade and proper toothed blade for each sawing job. All blades should be straight, have sharp teeth with uniform set, and be "broken in" at reduced speed and feed to obtain good cutting performance and blade life.

Every cutting situation has special characteristics requiring some experimentation to determine which blade, speed, and feed will achieve the most satisfactory results. Cutting charts indicate a good starting point, but must be modified by direct experience if optimum performance is desired. Here are some helpful pointers for adjusting speed and feed for good cutting performance.

1. Make sure the saw is cutting a good chip from the work piece.

2. Watch for blue chips or excessive "smoke" from coolant indicating heat in the cut which could damage the blade directly or work-harden the material being cut.

3. Watch for excessive vibration or chatter marks on the cut off piece indicating possible damage to saw teeth by "hammering".

4. Check the cut off piece for flatness. A dull blade or excessive feed will cause "cutting in" or "cutting out".

5. Inspect the blade for worn or dubbed cutting edges. Avoid cutting and coolant conditions which allow chips to "weld" to saw teeth.

6. When experimenting gradually increase speed, then feed, by small amounts until adverse effects are noted; then reduce speed to a reasonable level for continuous cutting. Re member that speed and feed must be "bal anced" to keep cutting a good chip.

Experimentation with coolants can be worthwhile to optimize cutting performance. Water soluble coolants are satisfactory for most band sawing. Leaner mixtures may be needed for greater penetration in work hardening materials such as stainless steel. Richer mixtures provide more lubrication and minimize chip "welding" to the blade when heavy feeds and high speeds are used with leaded steel, for example:

Blade Force Limit (Spring Loaded Blade Switch)

Blade Force Limit is set by the knob on the Guide Arm. This sets a spring force on the blade back-up bearing to interrupt excessive frame feed, and is indicated by the LOWER light blinking off during a cut. A setting of "3" will normally protect the blade from excessive force when the feed rate is set so the LOWER light remains on through the cut. This setting may be changed as needed for particular cutting applications. For a few appli-

cations at slow feed rates, the blade force switch may be set to control feed rate by interrupting down feed during the cut.

Lubrication

Correct and adequate lubrication is a very important factor in determining the life and service of your Wellsaw. It is essential that all dust, dirt, chips, etc. be thoroughly removed before lubricating the saw. The following lubrication recommendations cover usual applications. Heavy use and hostile environments may indicate more frequent lubrication for best saw performance.

Vise Screw, Ring Gear, Drive Pinion

1. Inspect monthly.
2. Use Lubriplate grease 130-A or equivalent.
3. Viscosity at 100°F: SUS750-800.
4. Military Specification: Mil-G-46003

Gear Case

1. Inspect after 3 years (6,000 hours).
2. Use Texaco Marfax O,
3. Viscosity: viscosity @ 100° = SUS 4125.
4. Military Specification: None

Hydraulic Cylinder

1. Inspect annually. Fill to top of plug. Drain and replace every 5 years (10,000 hours).
2. Fill with Mobil DTE 25 or equivalent.
3. Viscosity at 100°F: SUS 220.0
4. Military Specification: None

Motor

1. Inspect annually. Relubricate every 2 years (4,000 hours) 1 to 2 full strokes.
2. Use Shell Dolium R or equivalent.
3. Viscosity: Heavy Grease, Drop Point 219° C
4. Military Specification: None

Full Year Limited Warranty

This Wellsaw is warranted against defects in material and workmanship installed or performed at our factory. Within one year from the date of purchase, we will, free of charge, at our option, either repair or replace any part of the Wellsaw which our examination discloses to be defective because of workmanship or a defect in material, and to make any necessary service adjustments as required. This warranty does not apply if the Wellsaw has been subject to accident, alteration, abuse, misuse or which fails due to lack of care or as the result of inadequate power supply and specifically does not apply to normal wear of moving parts such as bearings, gears, pinion or blade. *There are no warranties beyond the description on the face hereof.*

Wellsaw shall not be liable for consequential or incidental damage suffered or incurred with respect to defective material or workmanship.

All transportation costs or parts submitted to Wellsaw under this warranty must be paid by the saws' owner. No products or parts are to be returned to our factory without first obtaining written permission.

Recommended Service Kits For Insurance Against Downtime

1 Year

M-426	Blade Brush	2 req'd.

2 Years

100406-002	Bearing, Top	2 req'd.
100416-003	Bearing, Side	4 req'd.
106317	Fixed Carbide Guide	2 req'd.
106319	Spring-Backed Carbide	2 req'd.
100066-005	"V" Belt	1 req'd.
M-426	Blade Brush	2 req'd.
102030	Drive Pinion	1 req'd.
F-146	Hydaulic Cup Leather	1 req'd.

Model 1270 History

The Wellsaw Model 1270 is the product of 50 years of development and the practical field experience gained through more than 2,000 of these true horizontal saws.

The original Model 12 provided a design that is still unique in the metal-cutting industries. It's twin-post, "C" Frame concept was - and is - the only saw that allows ready access to the cutting area from the end of the saw! It lets you move large, sometimes awkward, material into the saw from the side. This also eases the problems of handling heavy material either manually or mechanically.

The Model 12 also pioneered blade pressure sensing. This circuitry controls the hydraulic pressure system to maintain a steady, optimum pressure on the saw blade. It's the key to controlled cutting pressure through varying cross-sections of materials being cut. The result is more accurate cutting and longer blade life.

The Model 1200, introduced in 1955, doubled the motor horsepower of the saw and increased blade size from three-quarters inch to one inch. It was, overall, a heavier-duty design.

An automatic roller feed system was also designed to further automate the Model 1200 operation.

In 1967, additional design improvements were incorporated in today's Model 1270. These improvements included front mounted controls, a 3 HP T.E.F.C. motor, J.I.C. electrical controls and a further improvement of the blade pressure sensor system. Further up-grades have been incorporated into the automatic feed system and the hydraulic system has been designed into a single-motor, single-pump configuration for easier operation and maintenance.

Notes

Base

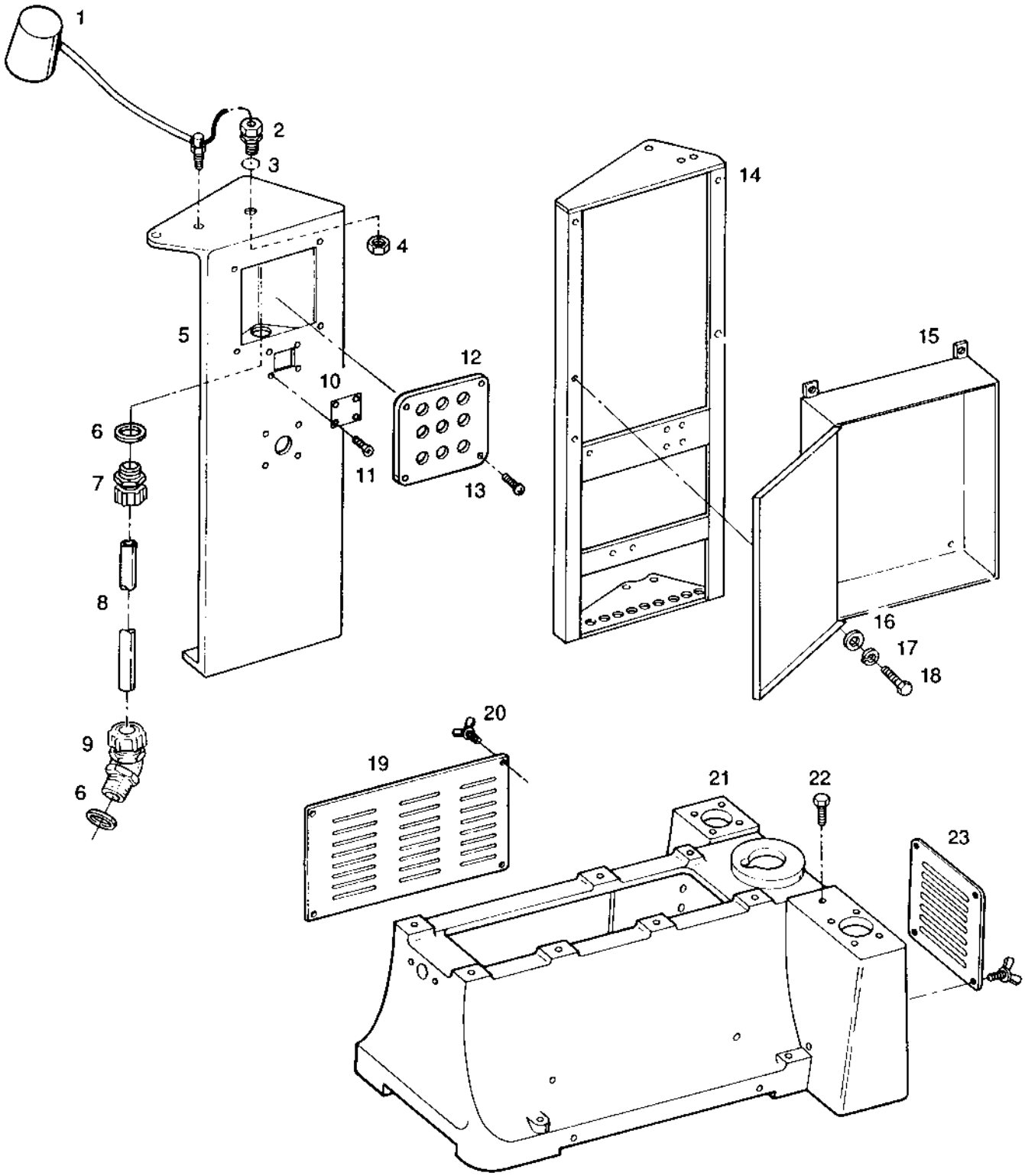

Base

1	100781-007	WORK LIGHT, 60-W, 115/60/1
2	100612-001	CONNECTOR, 1/2, TB 2521
3	100606-004	SEALING RING, 1/2
4	100240-001	CONDUIT LOCK NUT, 1/2
5	106104	FRONT CONTROL PANEL
6	100606-004	SEALING RING, 1 1/4, TB 5265
7	100605-005	CONNECTOR, 1 1/4, TB 5335
8	100607-141	FLEXIBLE CONDUIT, TYPE LT, 1 1/4 X 84"(CONTROL)
9	100605-006	CONNECTOR 45 DEG, 1 1/4, TB 5345
10	106112	COUNTER HOLE COVER
11	100001-027	MACHINE SCREW, FLAT HD, #5-40 X 3/8 (4 REQ'D)
12	106539-003	PUSH BUTTON COVER
13	100000-071	MACHINE SCREW, RD HD, 8-32 X 5/8 (4 REQ'D)
14	107039	CONTROL SUPPORT ASSY.
15	100690-017	CONTROL BOX W/ BACK PANEL
16	100029-004	FLAT WASHER, 3/8
17	100025-003	LOCK WASHER, 3/8
18	100004-026	CAP SCREW, HEX HD, 3/8-16 X 7/8
19	F-071	ACCESS DOOR, BACK
20	100063	THUMB SCREW W/WASHER, 1/4-20 X 1/2
21	106109	BASE
22	100004-044	CAP SCREW, HEX HD, 5/8-11 X 3
23	F-016	ACCESS DOOR, END

Hydraulics

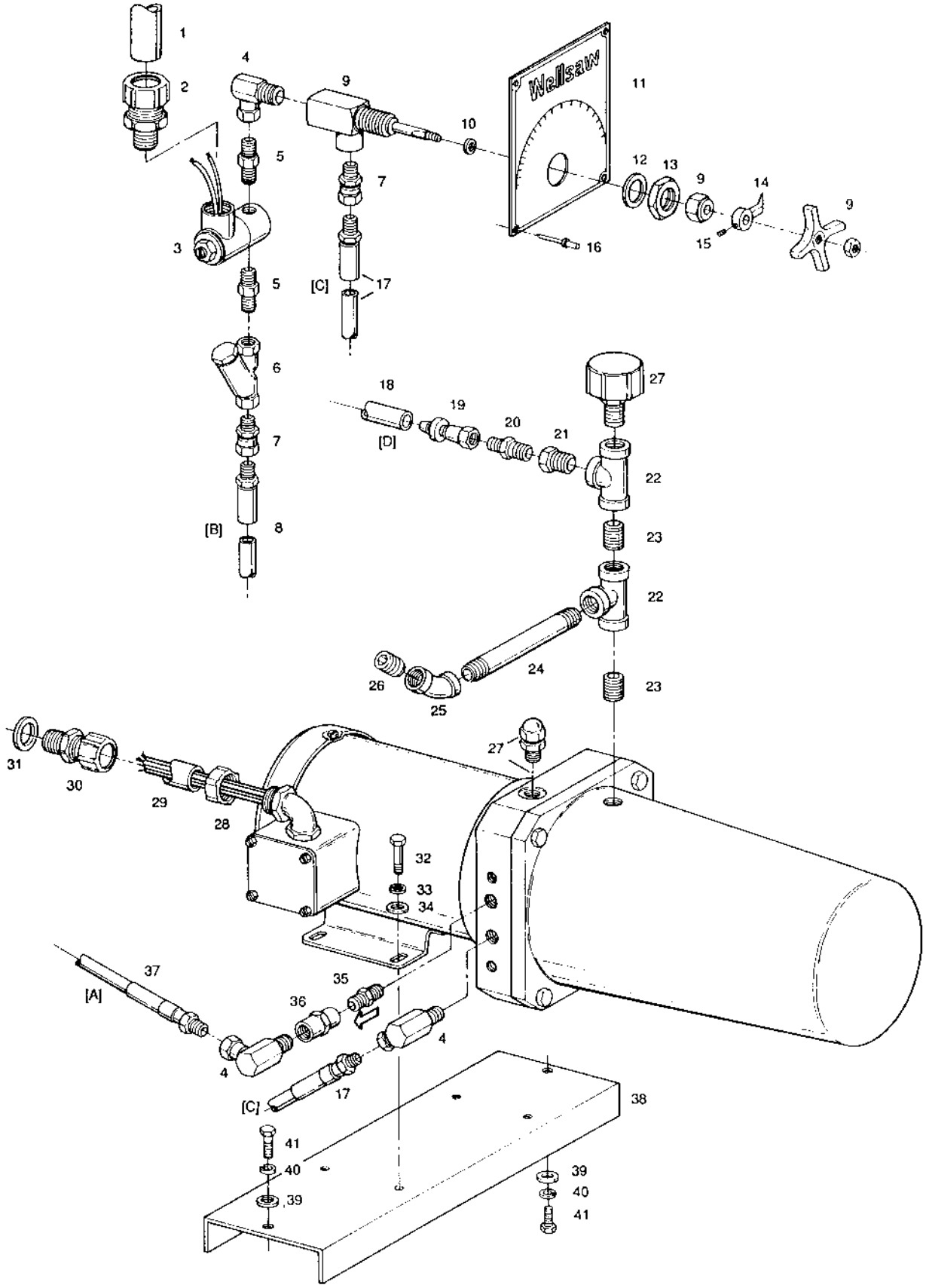
Wellsaw
1
2
3
4
5
6
7
8
9
10
11
12
13
14
15
16
17
18
19
20
21
22
23
24
25
26
27
28
29
30
31
32
33
34
35
36
37
38
39
40
41
[A]
[B]
[C]
[D]

Hydraulics

1	100607-137	FLEXIBLE CONDUIT, TYPE LT, 1/2 X 6"(SOLENOID VALVE)
2	100605-002	CONNECTOR, 1/2, TB 5332
3	100673-027	SOLENOID VALVE, 115/60/1
4	100313-001	SWIVEL ADAPTOR, 90 DEG MALE, 1/4
5	100332-001	HIGH PRESS NIPPLE, 1/4
6	100237-002	STRAINER, ASCO 8600A2
7	100329-001	SWIVEL ADAPTOR, STRAIGHT, 1/4
8	100331-036	HYD. HOSE ASSY. [B], 1/4 X 41"
9	100238-001	CONTROL VALVE W/ NYLON WASHER (#107065)
10	107065	NYLON WASHER
11	106134	NAME PLATE, WELLSAW
12	100238-003	PANEL WASHER
13	100238-004	PANEL NUT
14	150278	POINTER
15	100034-023	SET SCREW, SOCKET HD, CUP POINT, 1/4-20 X 5/16
16	100131-003	POP RIVET, 3/16 X 3/8
17	100331-022	HYD. HOSE ASSY. [C], 1/4 X 63"
18	100254-016	HOSE [D], 1/4 X 28"
19	100257-001	SWIVEL CONNECTOR, 1/4
20	100255-001	STRAIGHT ADAPTOR, 1/4
21	100208-003	REDUCING BUSHING, 3/8 TO 1/4
22	100207-003	PIPE TEE, 3/8
23	100203-035	CLOSE NIPPLE, 3/8
24	100203-043	PIPE NIPPLE, 3/8 X 5"
25	100205-003	PIPE ELBOW 45 DEG, 3/8
26	100211-012	PIPE PLUG, SOCKET HD, 3/8
27	106649	HYDRAULIC POWER UNIT 208-230-460/60/3, 1/2 HP TEF
	106649-004	SEAL KIT, HYDRAULIC POWER UNIT
28	100604-007	CONNECTOR 45 DEG, 1/2, TB 5342
29	100607-137	FLEXIBLE CONDUIT, TYPE LT, 1/2 X 60"(HYD. PUMP)
30	100605-002	CONNECTOR, 1/2, TB 5332
31	100606-001	SEALING RING, 1/2, TB 5262
32	100004-015	CAP SCREW, HEX HD, 5/16-18 X 3/4
33	100025-002	LOCK WASHER, 5/16
34	100029-003	FLAT WASHER, 5/16
35	100325	CHECK VALVE (NOTE DIRECTION OF FLOW)
36	100209-002	COUPLING, 1/4
37	100331-005	HYD. HOSE ASSY. [A], 1/4 X 27"
38	106650	MOUNTING PLATE, HYDRAULIC POWER UNIT
39	100029-004	FLAT WASHER, 3/8
40	100025-003	LOCK WASHER, 3/8
41	100004-027	CAP SCREW, HEX HD, 3/8-16 X 1

Hydraulic Cylinder

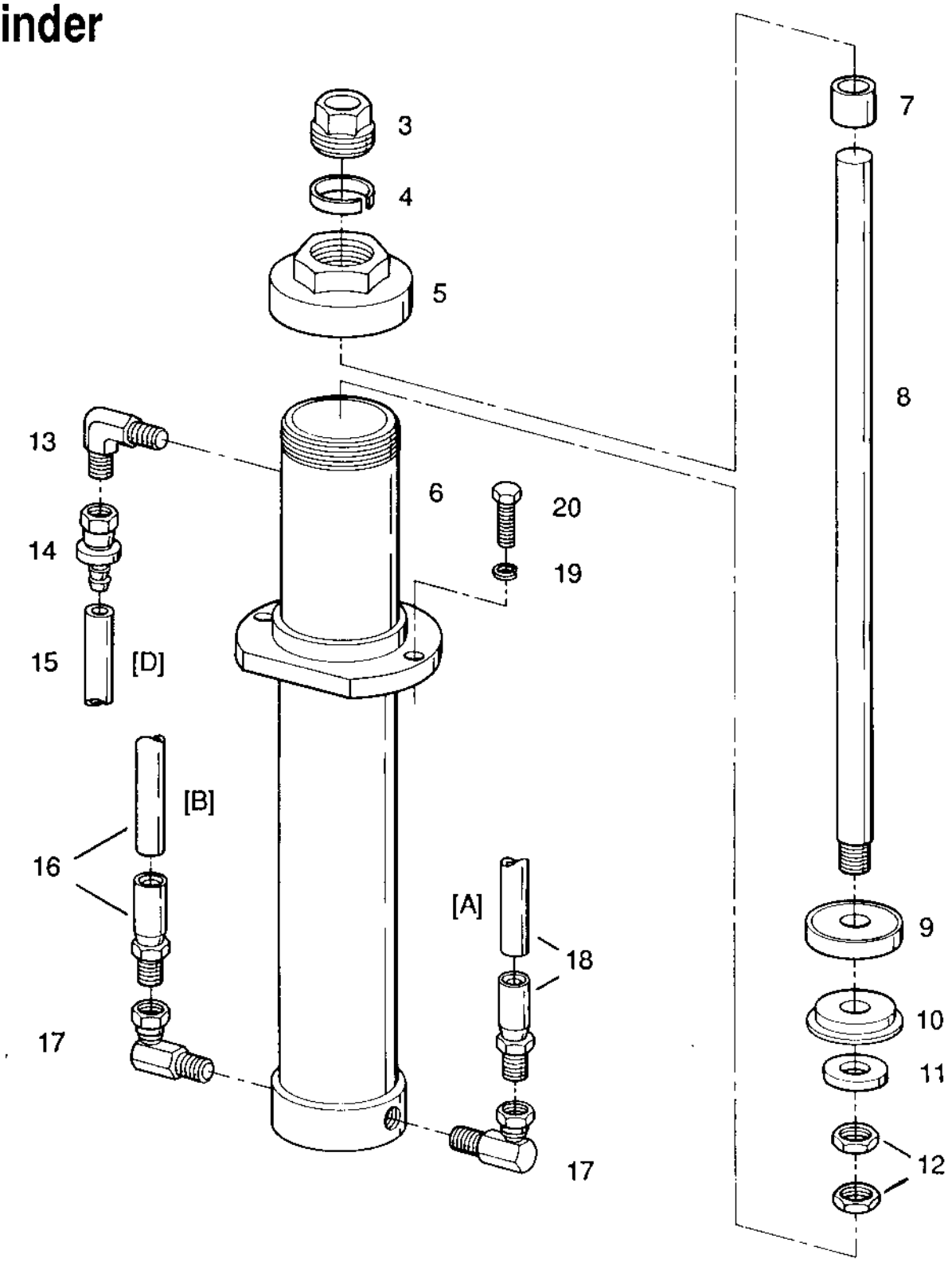

Hydraulic Cylinder

1	**F-307**	**HYDRAULIC CYLINDER & PISTON ASSY, ITEMS 3 THRU 12**
2	**101904**	**PISTON ROD ASSY, ITEMS 8 THRU 12**
3	F-130	GLAND BUSHING
4	100201-005	PACKING
5	F-209	CYLINDER CAP
6	F-306	HYDRAULIC CYLINDER
7	105415	SLEEVE
8	F-189	PISTON ROD
9	F-131	PISTON
10	F-146	RUBBER CUP
11	F-132	PISTON FOLLOWER
12	100019-016	HEX JAM NUT, 5/8-18, 2 REQ'D
13	100256-001	ELBOW MALE, 90 DEG, 1/4
14	100257-001	SWIVEL CONNECTOR, 1/4
15	100254-016	HOSE [D], 1/4 X 28"
16	100331-036	HYD. HOSE ASSY. [B], 1/4 X 41"
17	100313-001	SWIVEL ADAPTOR, 90 DEG MALE, 1/4
18	100331-005	HYD. HOSE ASSY. [A], 1/4 X 27"
19	100025-003	LOCK WASHER, 3/8
20	100004-027	CAP SCREW, HEX HD, 3/8-16 X 1

Coolant System

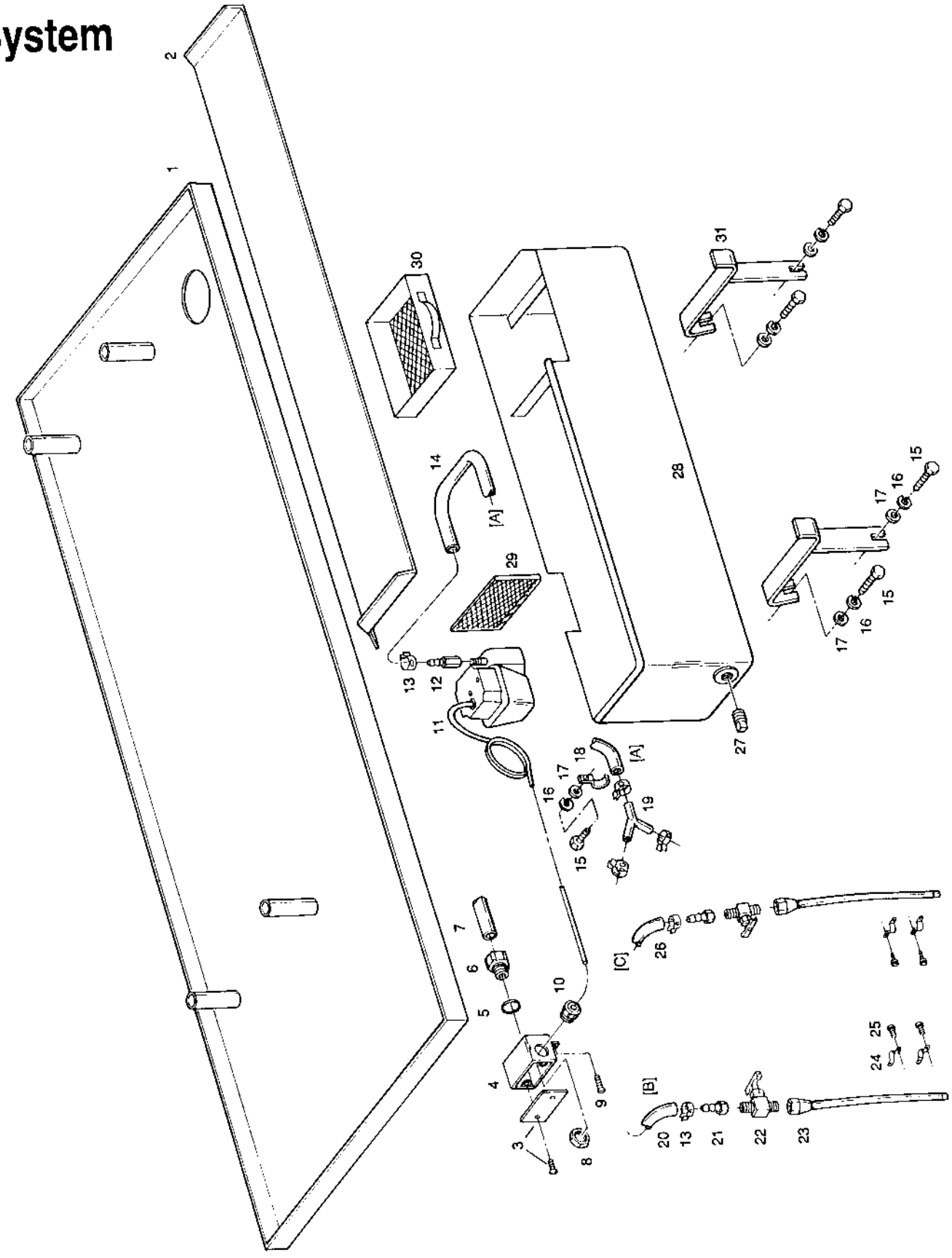

Coolant System

1	F-222	DRIP PAN
2	F-228	SPLASH GUARD
3	100796-007	COVER W/ SCREWS
4	100796-006	RECEPTACLE BOX
5	100606-001	SEALING RING, 1/2, TB 5262
6	100605-002	CONNECTOR, 1/2, TB 5332
7	100607-137	FLEXIBLE CONDUIT, TYPE LT, 1/2 X 82"(COOLANT PUMP)
8	100240-001	CONDUIT LOCK NUT, 1/2"
9	100000-018	MACHINE SCREW, RD HD, 10-32 X 3/8
10	100612-001	CONNECTOR, 1/2, TB 2521
11	100249-002	COOLANT PUMP, 115/60/1
12	102604	ADAPTOR, COOLANT PUMP
13	100219-001	HOSE CLAMP
14	100220-020	COOLANT HOSE (FROM PUMP) 3/8 X 96"
15	100004-005`	CAP SCREW, HEX HD, 1/4-20 X 5/8
16	100025-001	LOCK WASHER, 1/4
17	100029-002	FLAT WASHER, 1/4
18	100218-010	CLAMP
19	100340-002	"Y" CONNECTOR
20	100220-045	COOLANT HOSE (IDLE SIDE) 3/8 X 50"
21	102617	ADAPTOR, COLLANT HOSE
22	100226	NEEDLE VALVE
23	102024	COOLANT NOZZLE
24	100246-001	PIPE STRAP
25	100000-017	MACHINE SCREW, RD HD, 10-32 X 1/4
26	100220-044	COOLANT HOSE (DRIVE SIDE) 3/8 X 24"
27	100211-012	PIPE PLUG, SOCKET HD, 3/8
28	101674	COOLANT TANK
29	101565-001	SCREEN
30	101675	CHIP DRAWER
31	F-226	COOLANT TANK SUPPORT

Bed & Vise

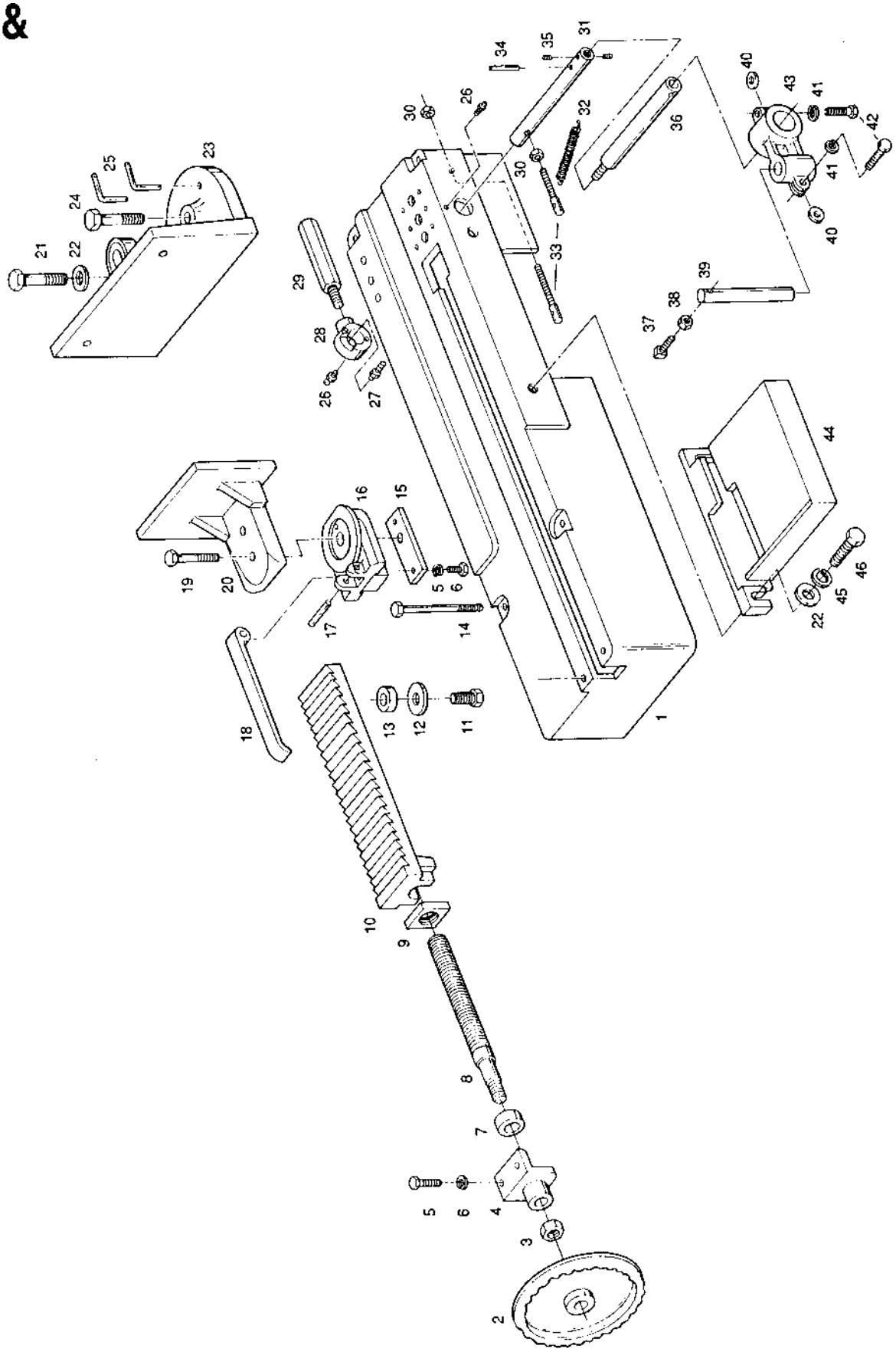
1
2
3
4
5
6
7
8
9
10
11
12
13
14
15
16
17
18
19
20
21
22
23
24
25
26
27
28
29
30
31
32
33
34
35
36
37
38
39
40
41
42
43
44
45
46

Bed &Vise

1	106101	BED
2	B-093	HAND WHEEL
3	100019-008	HEX JAM NUT, 3/4-10
4	M-076	VISE SCREW BRACKET
5	100004-015	CAP SCREW, HEX HD, 5/16-18 X 3/4
6	100025-002	LOCK WASHER, 5/16
7	100402	THRUST COLLAR
8	M-060	VISE SCREW
9	M-061	VISE SCREW NUT
10	F-005	VISE RATCHET
11	100004-020	CAP SCREW, HEX HD, 5/16-18 X 1 1/4
12	F-178	VISE RATCHET WASHER
13	F-179	VISE RATCHET GUIDE SPOOL
14	100004-111	CAP SCREW, HEX HD, 1/2-13 X 8
15	F-177	VISE SLIDE BLOCK GUIDE
16	F-006	SLIDE BLOCK
17	100053-002	ROLL PIN, 3/8 X 2 1/2
18	F-031	VISE RATCHET DOG
19	100004-049	CAP SCREW, HEX HD, 3/4-10 X 4
20	F-003	MOVEABLE VISE JAW
21	100004-042	CAP SCREW, HEX HD, 5/8-11 X 2
22	100029-008	FLAT WASHER, 5/8
23	F-001	FIXED VISE JAW
24	100004-048	CAP SCREW, HEX HD, 3/4-10 X 3
25	M-065	LOCATING PIN (2 REQ'D)
26	100243-001	GREASE FITTING, (GREASE MONTHLY)
27	101960	STOCK STOP STUD
28	106103	STOCK STOP CAM
29	101962	LEVER
30	100017-003	HEX NUT, 3/8-16
31	106102	STOCK STOP BAR
32	101234	FRAME SPRING
33	101233	ADJUSTING SCREW
34	100053-001	ROLL PIN, 7/32 X 2 1/2
35	100034-003	SET SCREW, CUP POINT, 5/16-16 X 3/8
36	106105-001	STOCK STOP EXTENSION BAR, 2 X 13 1/2"
37	100033-016	SET SCREW, SQUAR HD, 5/8-11 X 4
38	100019-007	HEX JAM NUT, 5/8-11
39	106107	STOP ARM
40	100030-007	FLAT WASHER, 1/2 S.A.E.
41	100025-005	LOCK WASHER, 1/2
42	100008-032	CAP SCREW, SOCKET HD, 1/2-13 X 1 1/2
43	106106	STOP ARM BRACKET
44	F-011	TIP OFF BLOCK
45	100025-007	LOCK WASHER, 5/8
46	100004-041	CAP SCREW, HEX HD, 5/8-11 X 1 1/2

Frame Yoke

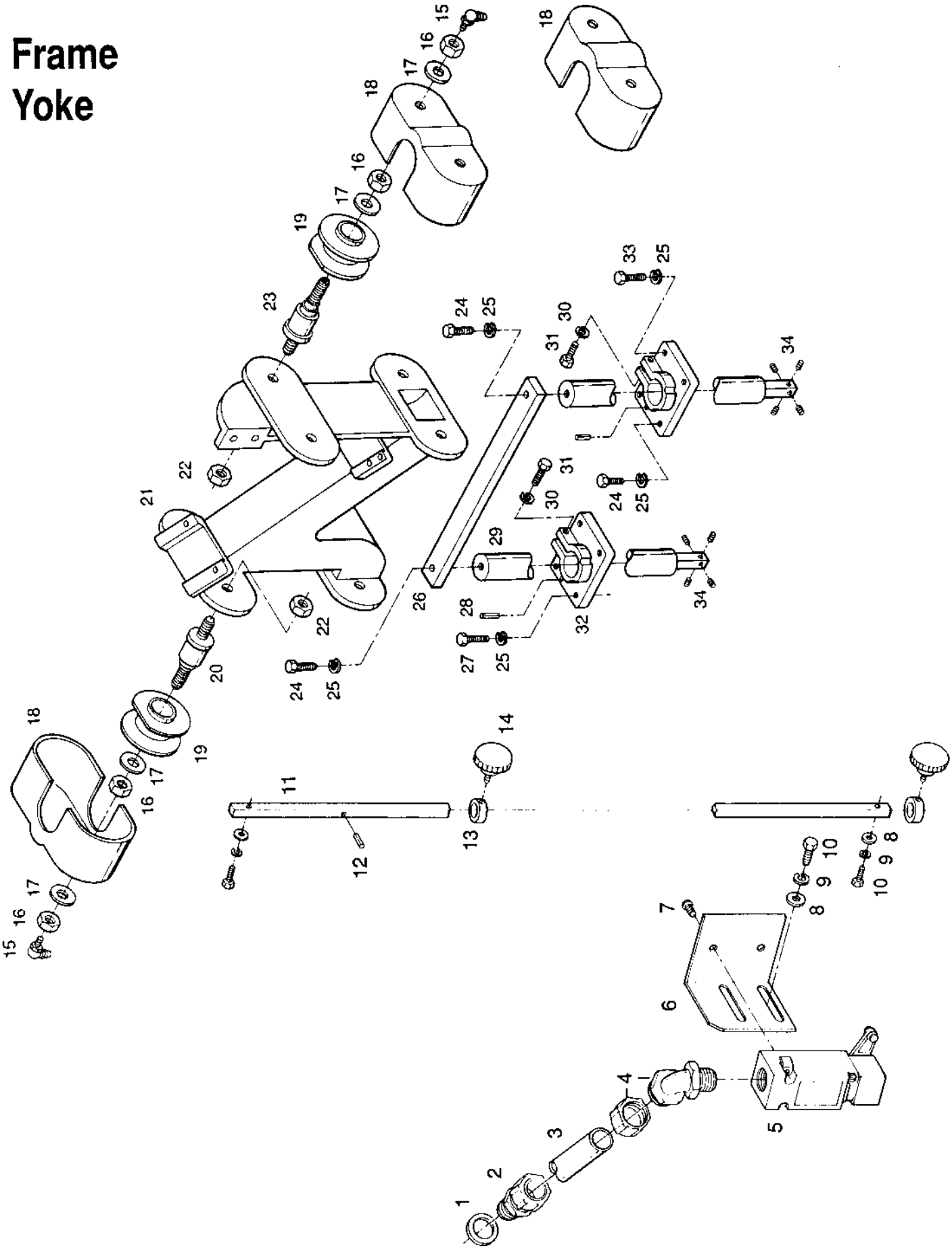
15
16
17
18
19
20
21
22
23
24
25
26
27
28
29
30
31
32
33
34
11
12
13
14
7
6
5
4
3
2
1
10
9
8

Frame Yoke

1	100606-001	SEALING RING, 1/2, TB 5262
2	100605-002	CONNECTOR, 1/2, TB 5332
3	100607-137	FLEXIBLE CONDUIT, TYPE LT, 1/2 X 96"(LIMIT SWITCH)
4	100604-002	CONNECTOR 90 DEG, 1/2", TB 5352
5	100782-006T	LIMIT SWITCH, FRAME
6	107058	LIMIT SWITCH BRACKET
7	100000-018	MACHINE SCREW, RD HD, 10-32 X 3/8
8	100029-002	FLAT WASHER, 1/4
9	100025-001	LOCK WASHER, 1/4
10	100004-005	CAP SCREW, HEX HD, 1/4-20 X 5/8
11	107060	LIMIT BAR
12	100053-012	ROLL PIN, 1/8 X 1
13	098030-005	COLLAR
14	098032-005	KNOB
15	100244-001	GREASE FITTING (GREASE MONTHLY)
16	100019-016	HEX JAM NUT, 5/8-18
17	100029-008	FLAT WASHER, 5/8
18	105526	ROLLER COVER
19	101979	ROLLER (FLAT GOES TO THE INSIDE)
20	101981	AXLE, FLOATING, BACK POST (4 REQ'D)
21	F-125	FRAME YOKE
22	100065-007	HEX NUT, 5/8-18
23	101982	AXLE, NON FLOATING, FRONT POST (4 REQ'D)
24	100004-037	CAP SCREW, HEX HD, 1/2-13 X 1 1/2
25	100025-005	LOCK WASHER, 1/2
26	106132	POST TIE BAR
27	100004-038	CAP SCREW, HEX HD, 1/2-13 X 2
28	100053-035	ROLL PIN, 1/4 X 1 (2 REQ'D PER POST BRACKET)
29	106133	VERTICAL POST, 2 1/2 X 59 1/2
30	100025-007	LOCK WASHER, 5/8
31	100004-042	CAP SCREW, HEX HD, 5/8-11 X 2
32	F-070	POST BRACKET
33	100004-070	CAP SCREW, HEX HD, 1/2-13 X 1 3/4
34	100034-022	SET SCREW, 5/8-11 X 1-1/4 (4 REQ'D PER POST)

Frame

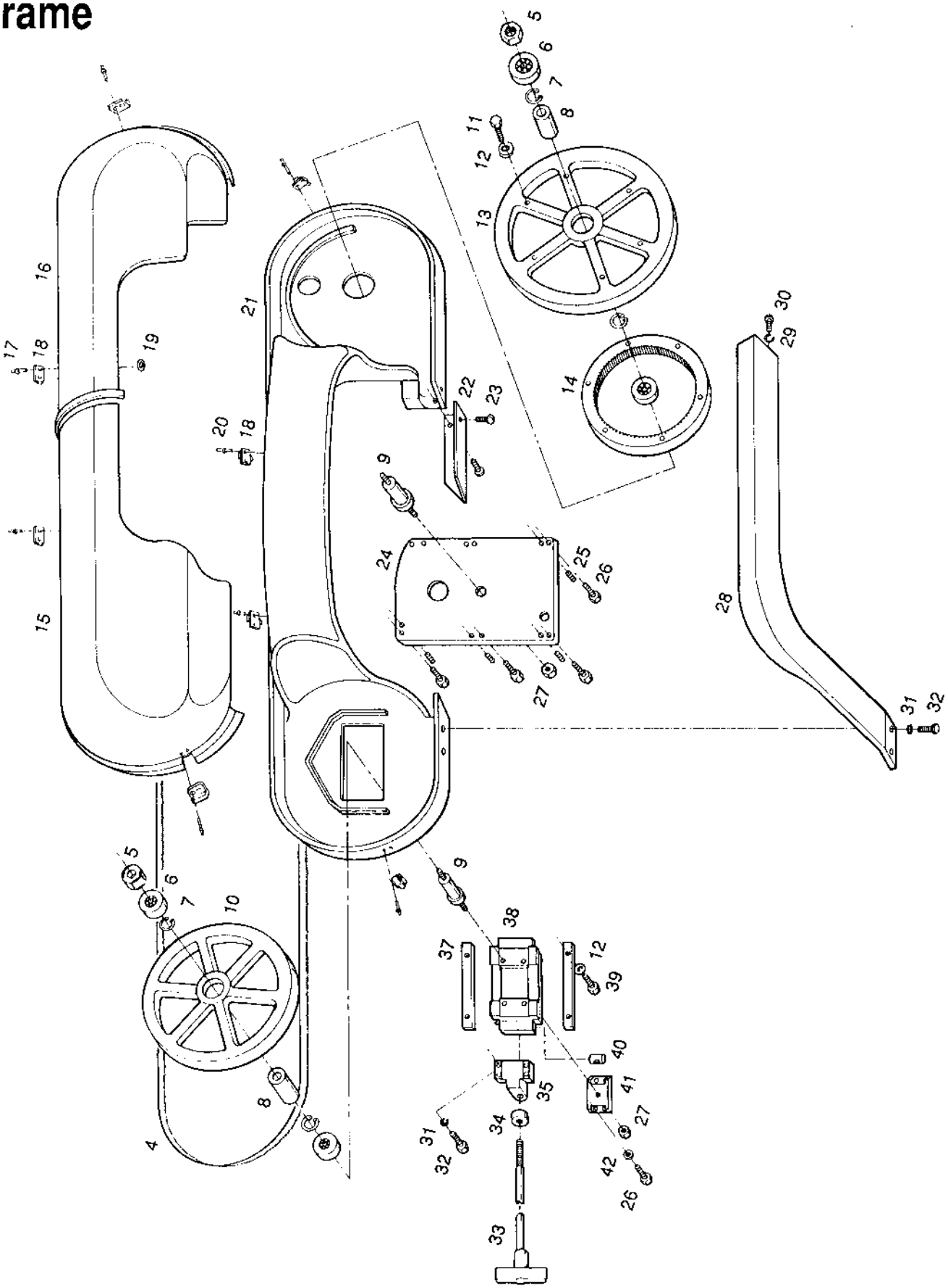
4
5
6
7
8
9
10
11
12
13
14
15
16
17
18
19
20
21
22
23
24
25
26
27
28
29
30
31
32
33
34
35
37
38
39
40
41
42

Frame

1	**106629**	**BAND WHEEL ASSY, IDLE END,5-10**
2	**106634**	**BAND WHEEL ASSY, DRIVE END, W/RING GEAR, 5-14 LESS 10**
3	**106635**	**BAND WHEEL ASSY, DRIVE END, LESS RING GEAR, 5-9 +13**
4	098005-028	BI-METAL BLADE, 13'6" X 1" X .035 (4-6V)
5	100019-008	HEX JAM NUT, 3/4-10 (I REQ'D PER WHEEL ASSY)
6	100414-002	BEARING (2 REQ'D PER WHEEL ASSY)
7	1000068-003	SNAP RING (2 REQ'D PER WHEEL ASSY)
8	106631	SPACER (1 REQ'D PER WHEEL ASSY)
9	106630	WHEEL AXLE (1 PER WHEEL ASSY)
10	F-017A	BAND WHEEL, IDLE END
11	100004-020	CAP SCREW, HEX HD, 5/16-18 X 1 1/4 (6 REQ'D)
12	100025-002	LOCK WASHER, 5/16
13	F-017B	BAND WHEEL, DRIVE END
14	102037	RING GEAR (CAST IRON)
15	106386	WHEEL COVER, IDLE END
16	106387	WHEEL COVER, DRIVE END
17	100131-006	POP RIVET, WHEEL COVER, 1/8 X 7/16
18	100135-001	LATCH (2 REQ'D PER WHEEL COVER)
19	100131-005	POP RIVET BACK-UP WASHER, 1/8 (WHEEL COVER)
20	100131-004	POP RIVET (FRAME) 1/8 X 1/2
21	F-019	FRAME
22	101679	TROUGH
23	100000-018	MACHINE SCREW, RD HD, #10-32 x 3/8
24	F-022	WHEEL PLATE
25	100034-006	SET SCREW, SOCKET HD, CUP POINT, 5/16-18 X 7/8
26	100004-019	CAP SCREW, HEX HD, 5/16-18 X 1 1/8
27	100017-008	HEX NUT, 3/4-10 (1 PER WHEEL ASSY)
28	F-018	GUIDE BEAM
29	100025-005	LOCK WASHER, 1/2
30	100004-036	CAP SCREW, HEX HD, 1/2-13 X 1 1/4
31	100025-003	LOCK WASHER, 3/8
32	100004-029	CAP SCREW, HEX HD, 3/8-16 X 1 1/4
33	101185	TAKE-UP SCREW
34	100410-001	THRUST BEARING
35	105105	TAKE-UP SUPPORT
36	100004-027	CAP SCREW, HEX HD, 3/8-16 X 1
37	B-046	SLIDE BLACK GUIDE, (2 REQ'D)
38	101164	SLIDE BLACK
39	10004-015	CAP SCREW, HEX HD, 5/16-18 X 3/4
40	155068	SWIVEL NUT
41	F-010	WHEEL ADJUSTING BLOCK
42	100029-003	FLAT WASHER, 5/16 (4 REQ'D)

Blade Guides

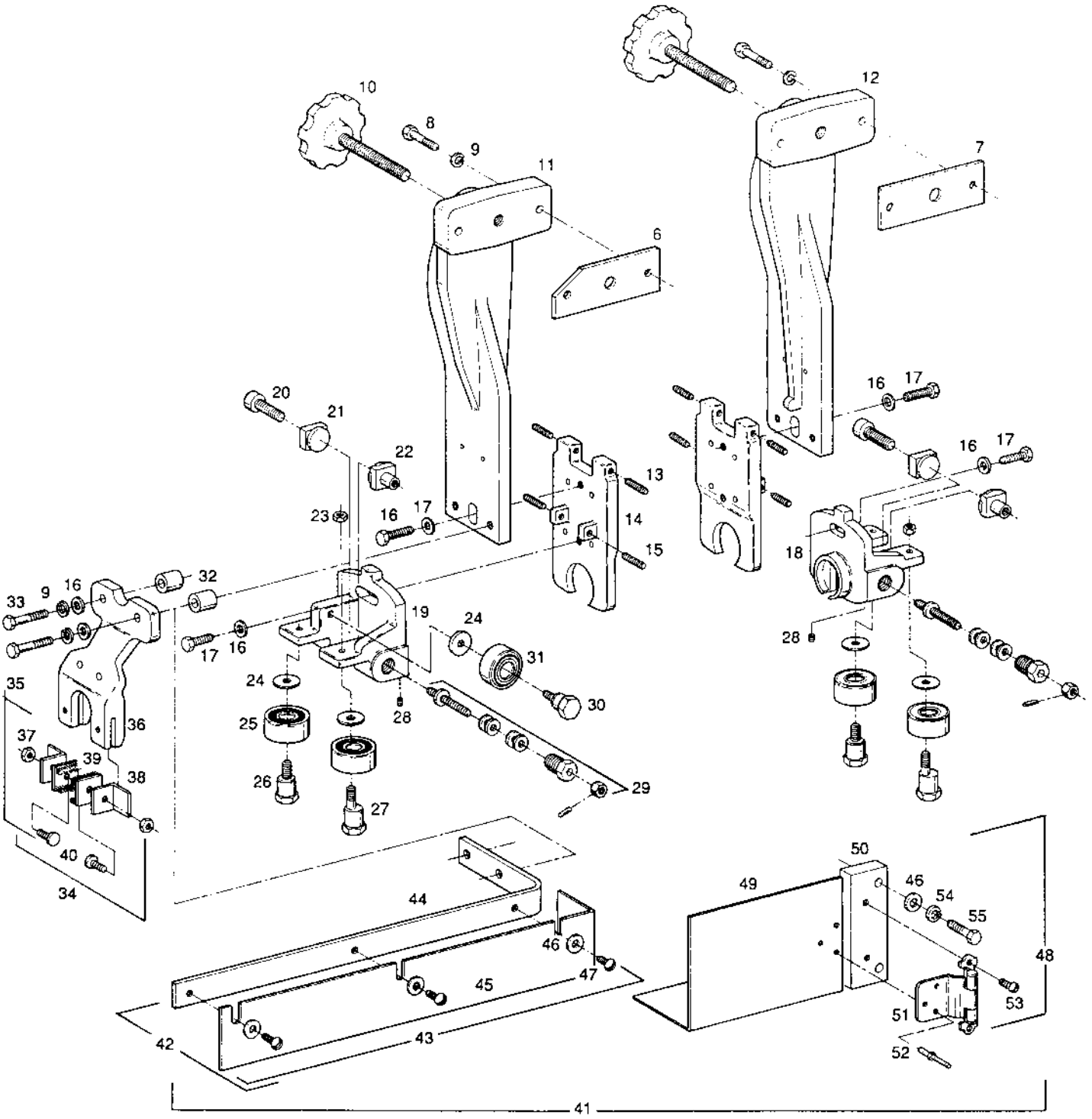

Blade Guides

1	**106657**	**BLADE GUIDE ASSY, IDLE END, 10-31 LESS 12, 18**
2	**106654**	**BLADE GUIDE ASSY, DRIVE END, 10-29 LESS 11,19**
3	**101520**	**ROLLER ADJUSTER & SET SCREW ASSY, ITEMS 13 THRU 15**
4	**106659**	**GUIDE SUPPORT ASSY (CARBIDE), IDLE END, 19 THRU 31**
5	**106656**	**GUIDE SUPPORT ASSY (CARBIDE) DRIVE END,20-29 + 18**
6	101969	GUIDE BRACKET PLATE, IDLE END
7	F-025	GUIDE BRACKET PLATE DRIVE END
8	100004-018	CAP SCREW, HEX HD, 5/16-18 X 1
9	100025-002	LOCK WASHER, 5/16
10	106220-002	HAND WHEEL & SCREW
11	F-240L	ROLLER GUIDE BRACKER IDLE END
12	101380	ROLLER GUIDE BRACKER, DRIVE END
13	100034-006	SET SCREW, 5/16-18 X 7/8 (2 REQ'D PER ROLLER ADJ.)
14	M-092	ROLLER ADJUSTER
15	100034-005	SET SCREW, 5/16-18 X 3/4 (2 REQ'D PER ROLLER ADJ)
16	100029-003	FLAT WASHER, 5/16
17	100004-017	CAP SCREW, HEX HD, 5/16-18 X 7/8
18	106316	GUIDE SUPPORT, DRIVE END
19	106315	GUIDE SUPPOER, IDLE END
20	100008-018	CAP SCREW, SOCKET HD, 5/16-18 X 3/4
21	106317	FIXED CARBIDE GUIDE
22	106319	SPRING-BACKED CARBIDE GUIDE
23	101300	HEX NUT
24	101186	ROLLER GUIDE WASHER
25	100416-003	BEARING, SID (2 REQ'D PER GUIDE ASSY)
26	101178	ROLLER AXLE
27	101177	ECCENTRIC ROLLER AXLE
28	100127-003	SET SCREW, NYLON POINT, 1/4-20 X 5/16
29	106285	GUIDE PRE-LOAD ASSY
30	101179	ROLLER AXLE, TOP
31	100406-002	BEARING, TOP
32	101992	SPACER (2 REQ'D)
33	100004-104	CAP SCREW, HEX HD, 5/16-18 X 2 3/4
34	**M-309**	**BLADE BRUSH BRACKET ASSY, COMPLETE, ITEMS 36-40**
35	**101615**	**BLADE BRUSH ASSY, ITEMS 37-40**
36	M-198	BLADE BRUSH BRACKET
37	100017-001	HEX NUT, 1/4-20 (2 REQ'D)
38	M-425	BLADE BRUSH ANGLE (2 REQ'D)
39	M-426	BLADE BRUSH (2 REQ'D)
40	100073-003	WELD BOLT, 14-20 x 1/2 (2 REQ'D)
41	**106548**	**BLADE GUARD, COMPLETE, IDLE & DRIVE ENDS, 42 + 48**
42	**106564-001**	**BLADE GUARD ASSY, IDLE END, ITEMS 44-47 + 32**
43	106556-001	BLADE GUARD ASSY, IDLE END, ITEMS 45, 46, 47
44	105536	BLADE GUARD MOUNTING BRACKET, IDLE END
45	106546-001	BLADE GUARD, IDLE END
46	100029-002	FLAT WASHER, 1/4
47	100000-024	MACHINE SCREW, RD HD, 14-20 X 3/8
48	**106563**	**BLADE GUARD, COMPLETE, DRIVE END, ITEMS 49-55 + 46**
49	106543	BLADE GUARD, DRIVE END
50	106544	BLADE GUARD MOUNTING DRIVE END
51	105550	HINGE
52	100131-003	POP RIVET, 3/16 X 3/8
53	100000-059	MACHINE SCREW, RD HD, 8-32 X 3/8
54	100025-001	LOCK WASHER, 1/4
55	100004-098	CAP SCREW, HEX HD, 1/4-20 X 7/8

Gear Box Assembly

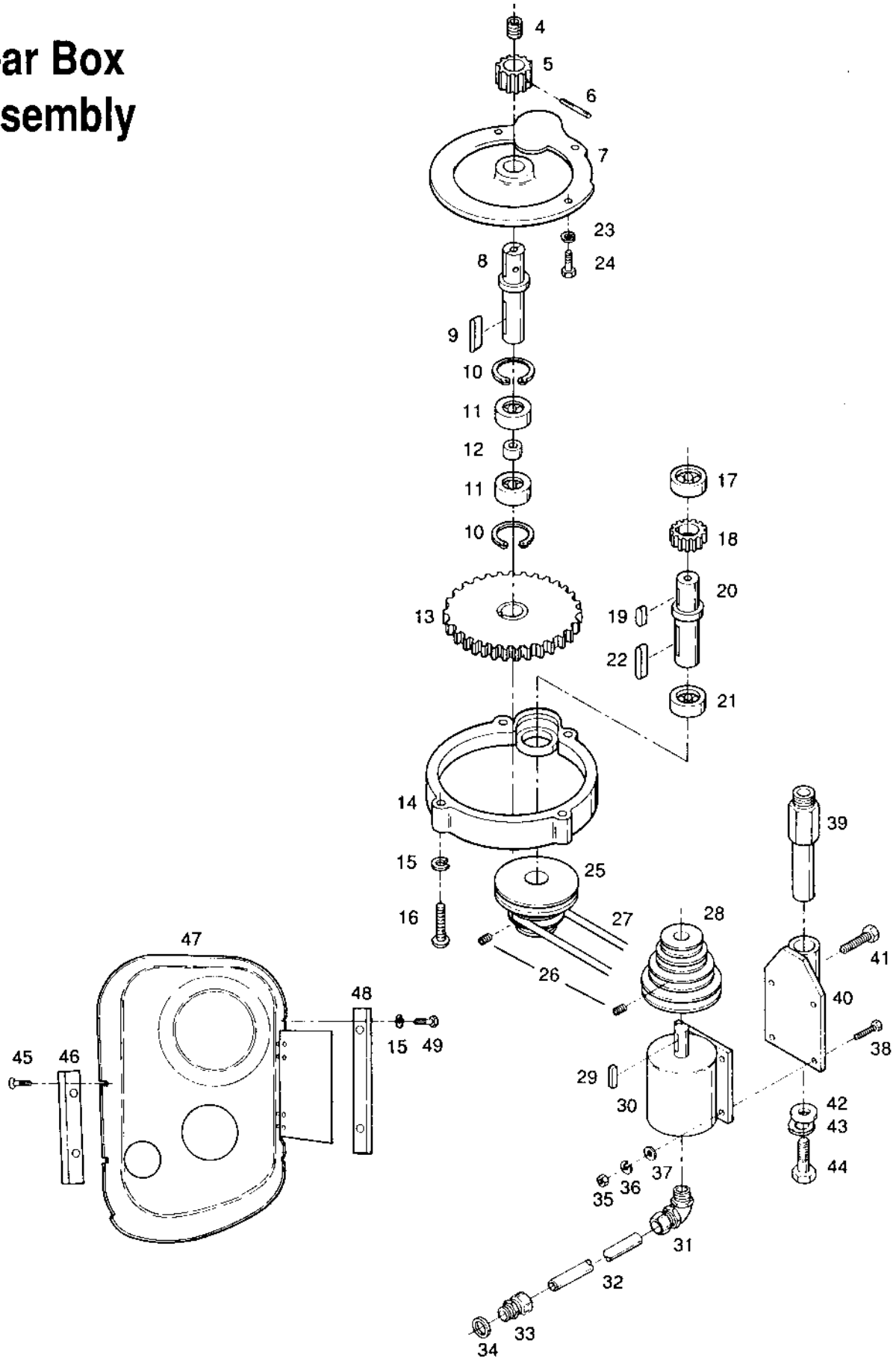

Gear Box Assembly

1	**102027**	**GEAR BOX ASSY, ITEMS 4-21**
2	**102029**	**DRIVE SHAFT & PINION ASSY, ITEMS 4, 5, 6 & 8**
3	**101916**	**PULLEY SHAFT & PINION ASSY, ITEMS 18-21**
4	100211-010	PIPE PLUG, SOCKET HD, 1/8
5	102030	DRIVE PINION
6	100053-007	ROLL PIN, 7/32 X 1 3/8
7	F-013	GEAR CASE
8	101914	DRIVE SHAFT
9	100056-010	SQUARE KEY, DRIVE SHAFT 3/16 X 3/16 X 1
10	100068-005	SNAP RING (2 REQ'D)
11	100403-003	BEARING (2 REQ'D)
12	F-271	SPACER
13	F-096	INTERMEDIATE GEAR, PLASTIC (FLANGE DOWN)
14	F-027	GEAR CASE COVER
15	100025-001	LOCK WASHER, 1/4 (4 REQ'D)
16	100000-030	MACHINE SCREW, RD HD, 1/4-20 X 2 1/2 (4 REQ'D)
17	100405-002	BEARING
18	F-097	HELICAL PINION GEAR
19	100056-001	SQUARE KEY (PULLEY SHAFT) 1/8 X 1/8 X 3/4
20	101189	PULLEY SHAFT
21	100414-003	BEARING
22	100056-015	SQUARE KEY (DRIVEN PULLEY) 3/16 X 3/16 X 1 7/8
23	100025-003	LOCK WASHER, 3/8 (4 REQ'D)
24	100004-026	CAP SCREW, HEX HD, 3/8-16 X 7/8 (4 REQ'D)
25	101156	PULLEY, DRIVEN, .7878 BORE (4 STEP)
26	100034-003	SET SCREW, SOCKET HD, CUP POINT, 5/16-18 X 3/8
27	100066-005	"V" BELT
28	104557-001	PULLEY, MOTOR, 7/8 BORE (4 STEP)
29	100056-014	SQUARE KEY, MOTOR 3/16 X 3/16 X 1 1/2
30	100835-005	MOTOR, 3 HP, TEFC 208-230-460/60/3
31	100604-007	CONNECTOR, 45 DEGREE, 1/2, TB 5342
32	100607-137	FLEXIBLE CONDUIT, TYPE LT, 1/2 X 36" (MOTOR)
33	100605-002	CONNECTOR, 1/2, TB 5332
34	100606-001	SEALING RING, 1/2, TB 5262
35	100017-002	HEX NUT, 5/16-18
36	100025-002	LOCK WASHER, 5/16
37	100029-003	FLAT WASHER, 5/16
38	100004-016	CAP SCREW, HEX HD, 5/16-18 X 7/8
39	106536	MOTOR POST
40	106537	MOTOR PLATE WELDMENT
41	100004-034	CAP SCREW, HEX HD, 1/2-13 X 3/4
42	F-054	PIVOT POST WASHER
43	100025-005	LOCK WASHER, 1/2
44	100004-035	CAP SCREW, HEX HD, 1/2-13 X 1
45	100155-001	MACHINE SCREW, TRUSS HD, 1/4-20 X 1/2
46	106534	BELT GUARD BRACKER (SHORT)
47	106533	BELT GUARD
48	106535	BELT GUARD BRACKET (LONG)
49	100004-003	CAP SCREW HEX HD, 1/2-20 X 1/2
		TEXACO MARFAX O GREASE 8 OZ.

Micro Switch

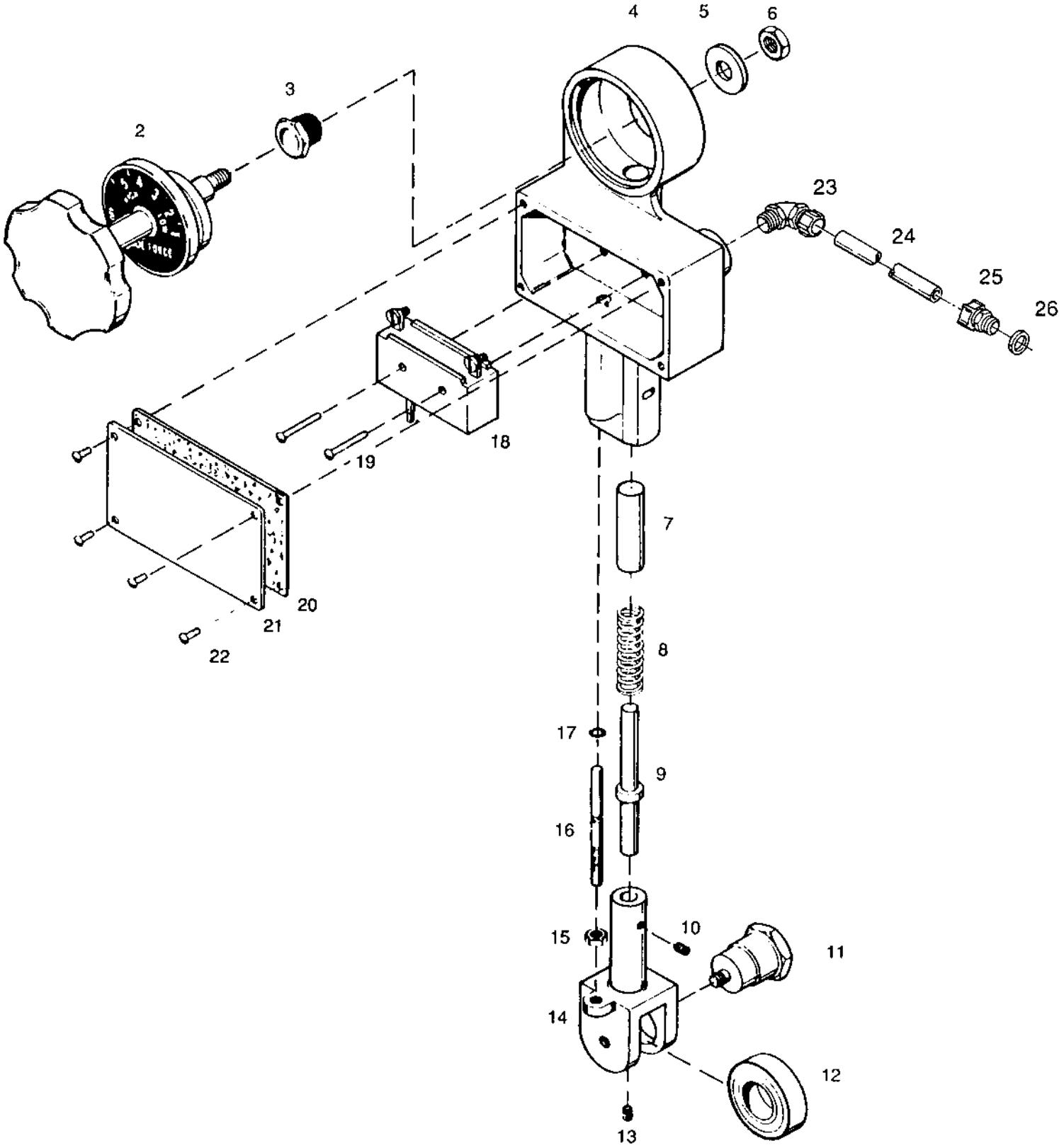

Microswitch

1	**106329**	**MICRO-SWITCH ASSY, INCLUDES ITEMS 2 THRU 22**
2	106337	CAM ASSY
3	106332	BUSHING
4	106331	HOUSING
5	100029-004	FLAT WASHER, 3/8
6	100023-001	NYLON LOCKNUT, 3/8-24
7	106336	CAM FOLLOWER
8	101369	SPRING
9	106335	SPRING STUD
10	100034-002	SET SCREW, CUP POINT, 1/4-20 X 1/2
11	101372	ROLLER AXLE
12	100406-002	BEARING
13	100034-026	SET SCREW, CUP POINT, 1/4-20 X 3/4
14	106333	ROLLER YOKE
15	100015-015	NUT, HEX, MACHINE SCREW, 1/4-20
16	106334	STUD
17	100305-003	"O" RING, MICRO-SCWITCH
18	100543	MICRO-SWITCH, BLADE PRESSURE
19	100000-061	MACHINE SCREW, RD HED, 6-32 X 7/8 (2 REQ'D)
20	106341	GASKET
21	106342	COVER PLATES
22	100000-009	MACHINE SCREW, RD HD, 8-32 X 1/4 (4 REQ'D)
23	100604-002	CONNECTOR, 90 DEGREE, 1/2, TB 5352
24	100607-137	FLEXIBLE CONDUIT, TYPE LT, 1/2 X 96" (MICRO SWITCH)
25	100605-002	CONNECTOR, 1/2, TB 5332
26	100606-001	SEALING RING, 1/2 TB 5262

Optional Drives

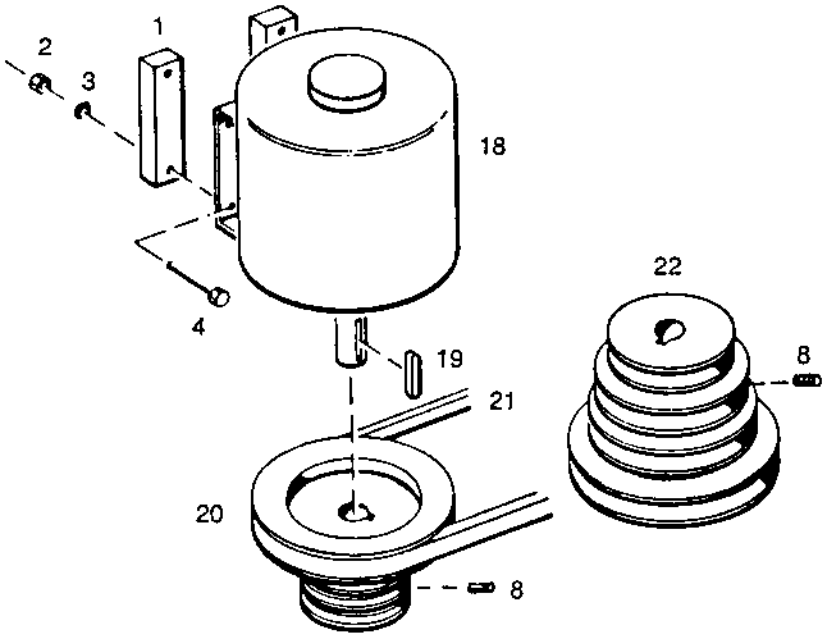

For 80-125-200-850 FPM

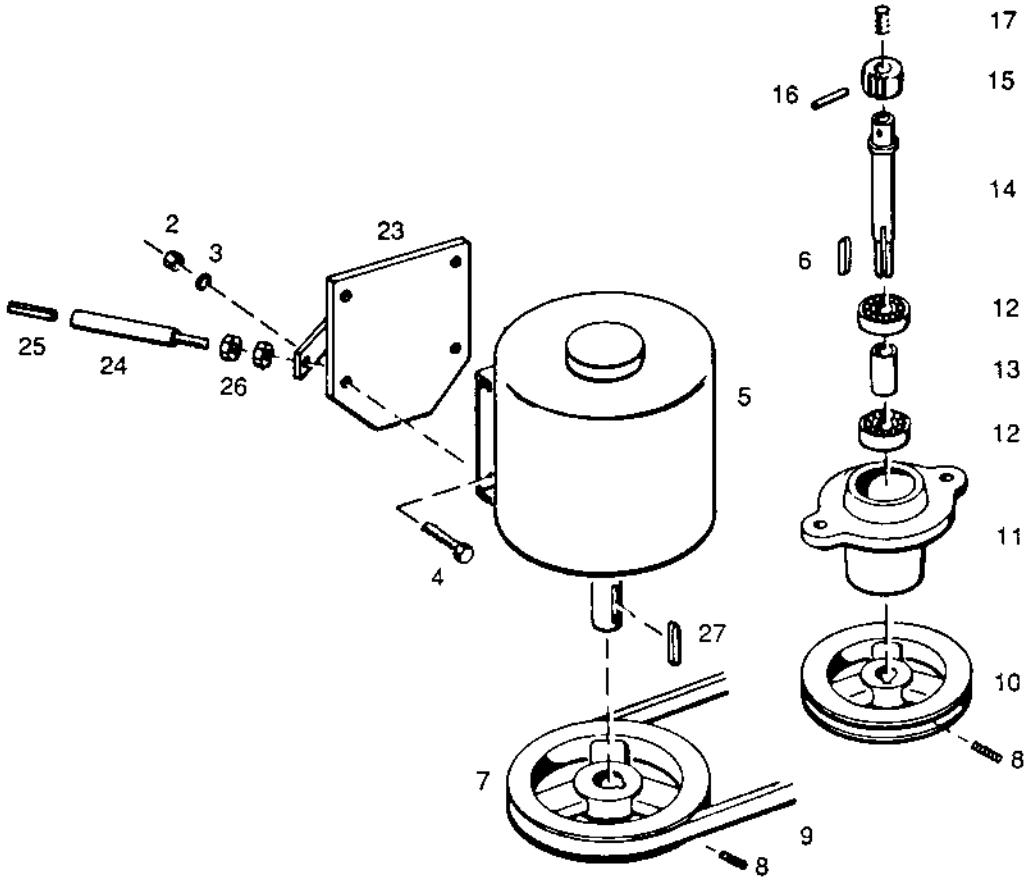

For 1800 FPM

Optional Drives

	102039	**HUB ASSY, INCLUDES ITEMS 11 THRU 17**
1	106118-001	SPACER BAR
2	100017-002	HEX NUT, 5/16-18
3	100025-002	LOCK WASHER, 5/16
4	100004-022	CAP SCREW, HEX HD, 5/16-18 X 1 1/4
5	100835-005	3 HP MOTOR.
6	100056-012	SQUARE KEY, 3/16 X 3/16 X 1 1/4
7	103074-002	PULLEY, MOTOR
8	100034-003	SET SCREW, 5/16-18 X 3/8
9	100067-007	"V" BELT
10	103075-001	PULLEY, DRIVEN
11	F-174	PULLEY SHAFT HOUSING
12	100416-002	BALL BEARING, 2 REQ'D.
13	F-176	SPACER
14	101427	PULLEY SHAFT
15	102030	DRIVE PINION
16	100053-007	ROLL PIN, 7/32 X 1 3/8
17	100211-010	PIPE PLUG
18	100835-005	3 HP MOTOR.
19	100056-014	SQUARE KEY, 3/16 X 1 1/2
20	104558-001	PULLEY, MOTOR
21	100066-018	"V" BELT, 30"
22	102021	PULLEY, DRIVEN
23	106554	MOTOR PLATE
24	106225	BRACE STUD
25	100053-020	ROLL PIN
26	100019-005	HEX JAM NUT, 1/2-13
27	100056-017	SQUARE KEY, 1/4 X 1/4 X 1 3/4

PARTS NOT ILLUSTRATED

100069-011	SNAP RING, SHAFT (1REQ'D)
100068-005	SNAP RING, HOUSING (2 REQ'D)
106555	BELT GUARD FOR 1800 FPM OPTION

Control Layout
1270 Manual

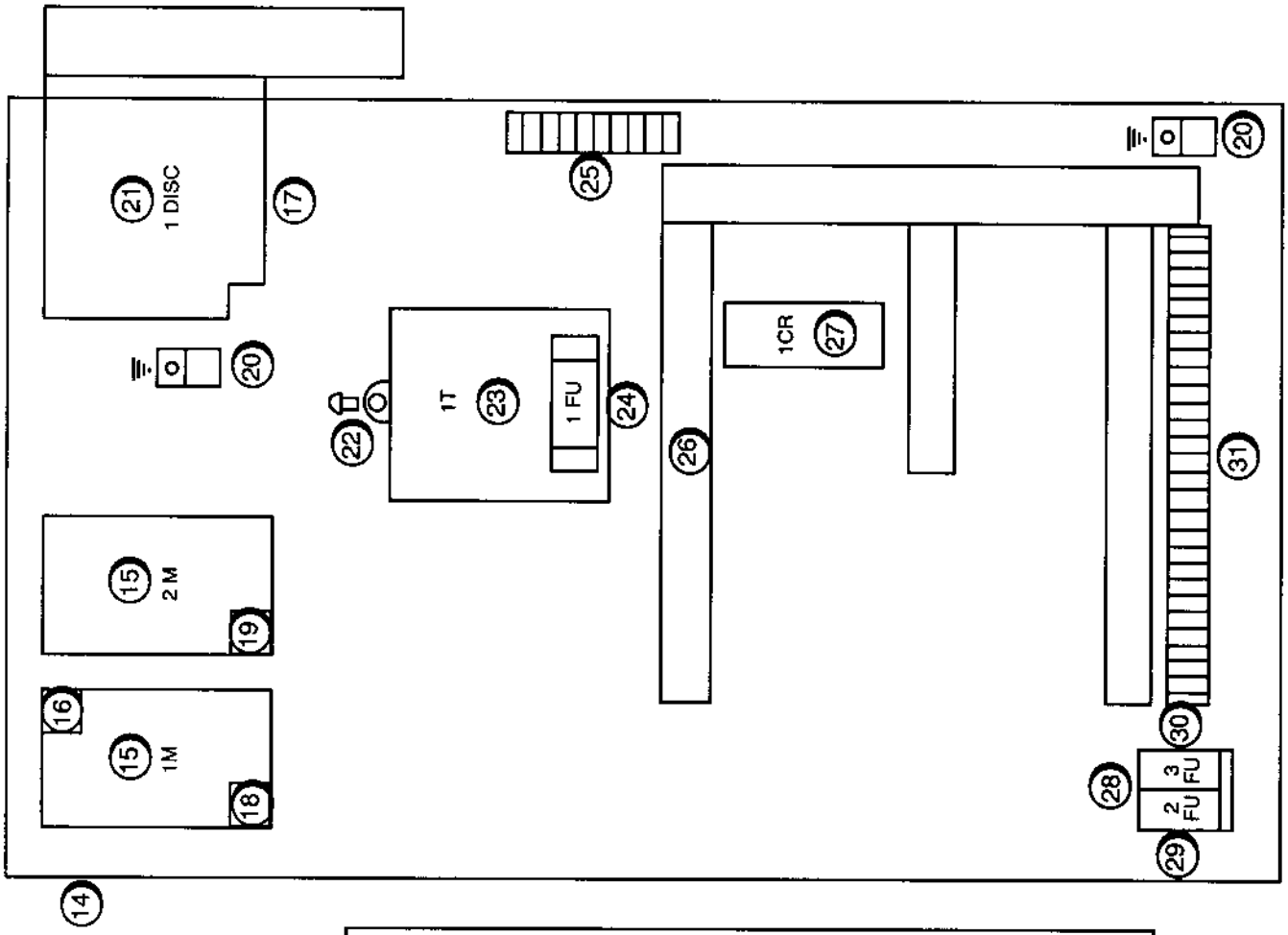

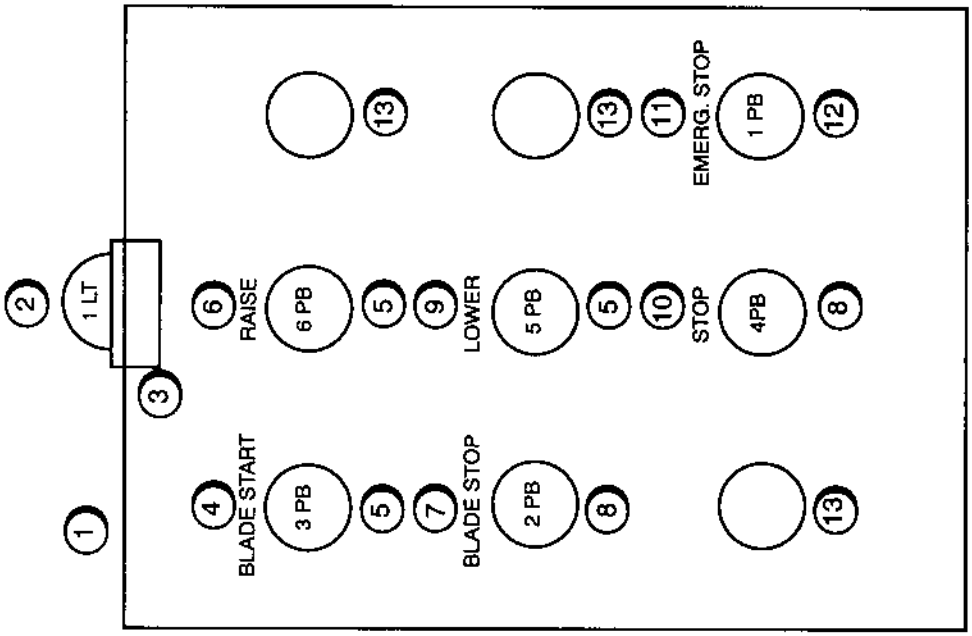

Control Layout
1270 Manual

NOTE: IEC controls starting with SN 2183

1	106539-003	PUSH BUTTON PANEL
2	100577-004T	LENS, ORANGE (USE W/1 LT)
3	100577-003T	BASE ASSY W/BULB, FRAME FEED LIGHT, 1 LT
	100577-005	REPLACEMENT BULB
4	100699-058	LEGEND PLATE (BLADE START)
5	100696-018T	PUCH BUTTON, BLADE START (3PB), LOWER (5PB), RAISE (6PB)
6	100699-056	LEGEND PLATE (BLADE RAISE)
7	100699-027	LEGEND PLATE (BLADE STOP)
8	100696-017T	PUSH BUTTON, BLADE STOP (2PB), FRAME STOP (4PB)
9	100699-057	LEGEND PLATE (BLADE LOWER)
10	100699-012	LEGEND PLATE (STOP)
11	100699-013	LEGEND PLATE (EMERGENCY STOP)
12	100696-014T	PUSH BUTTON, EMERGENCY STOP (1 PB)
13	100761-001	HOLE PLUG, PUSH BUTTON PANEL
14	100690-017	CONTOL BOX W/BACK PANEL
15	100867-007	MAGNETIC STARTER (1M + 2M)
16	100867-016	AUXILLARY CONTRACTS
17	100628-020	FUSE, 15A (3 REQ'D)
18	100867-013	OVERLOAD (1M) MOTOR, 208-230V, 6.5-6.2A
	100867-012	OVERLOAD (1M) MOTOR, 460V, 3.1A
19	100867-009	OVERLOAD (2M) HYD, 208-230V, 2.1-2.0A
	100867-008	OVERLOAD (2M) HYD, 460V, 1.0A
20	100595-001	GROUND CLAMP
21	100780-009T	DISCONNECT, FLANGE MOUNTED (1 DISC)
22	100000-019	MACHINE SCREW RD HD, 10-32 X 1/2
23	100869-003	TRANSFORMER, 500VA, 230-460 50/60 HZ (1 T)
24	100628-013	FUSE, FRN-5, TRANSFORMER (1 FU)
25	100717-021	TERMINAL STRIP, 6 UNITS
26	100811	PANEL CHANNEL WITH COVER, 1 X 3 X 38"
27	100746-028	RELAY ASSY (1 CR)
28	100717-014	FUSE CLIP (2FU, 3 FU)
29	100628-008	FUSE, FNM-3, COOLANT PUMP
30	100628-014	FUSE, FNM-1, WORKLIGHT (3FU)
31	100717-020	TERMINAL STRIP, 17 UNITS

Electrical Schematic
1270 Manual

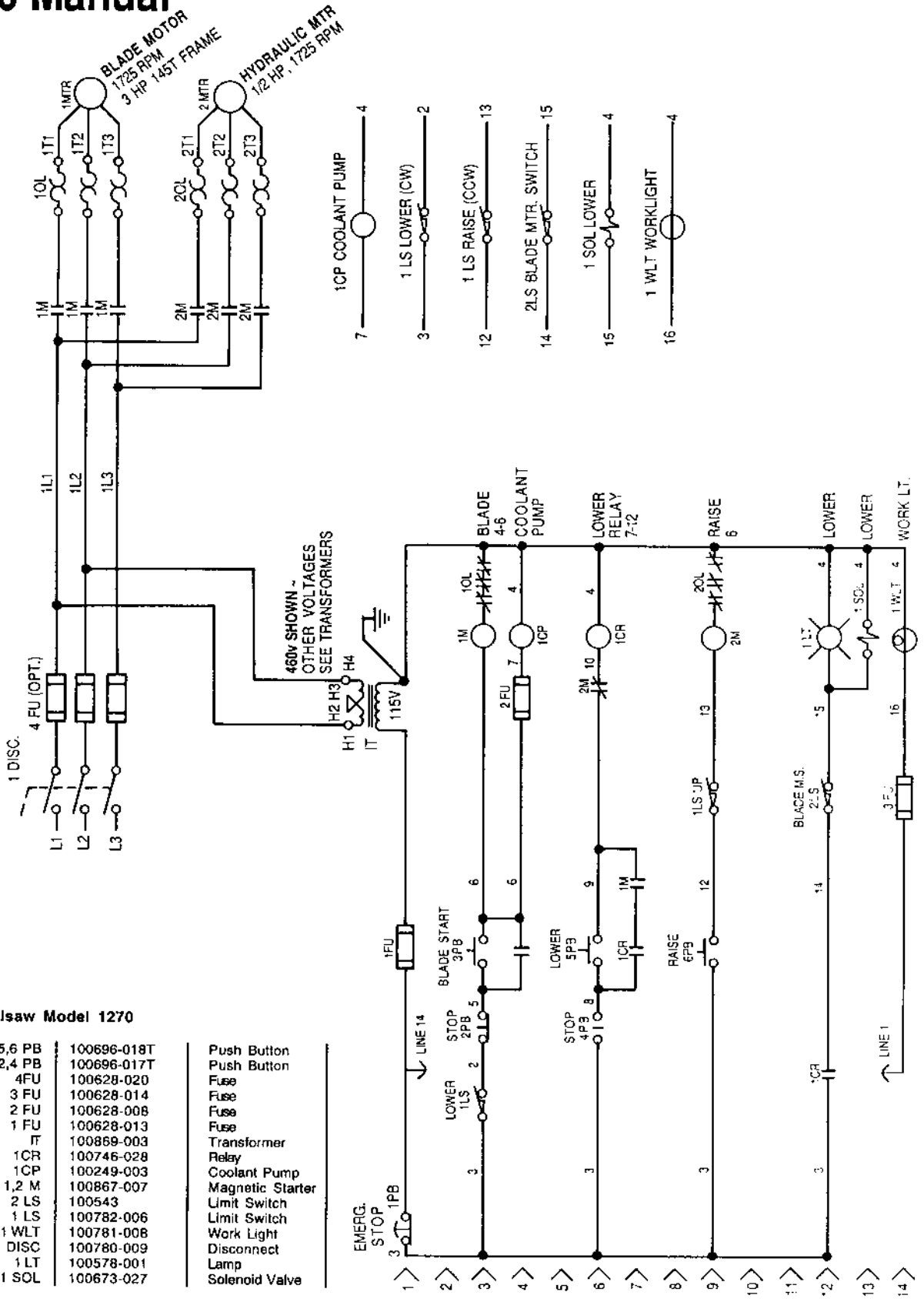

Wellsaw Model 1270

3,5,6 PB	100696-018T	Push Button
2,4 PB	100696-017T	Push Button
4FU	100628-020	Fuse
3 FU	100628-014	Fuse
2 FU	100628-008	Fuse
1 FU	100628-013	Fuse
IT	100869-003	Transformer
1CR	100746-028	Relay
1CP	100249-003	Coolant Pump
1,2 M	100867-007	Magnetic Starter
2 LS	100543	Limit Switch
1 LS	100782-006	Limit Switch
1 WLT	100781-008	Work Light
1 DISC	100780-009	Disconnect
1 LT	100578-001	Lamp
1 SOL	100673-027	Solenoid Valve

Electrical Schematic
1270 Automatic

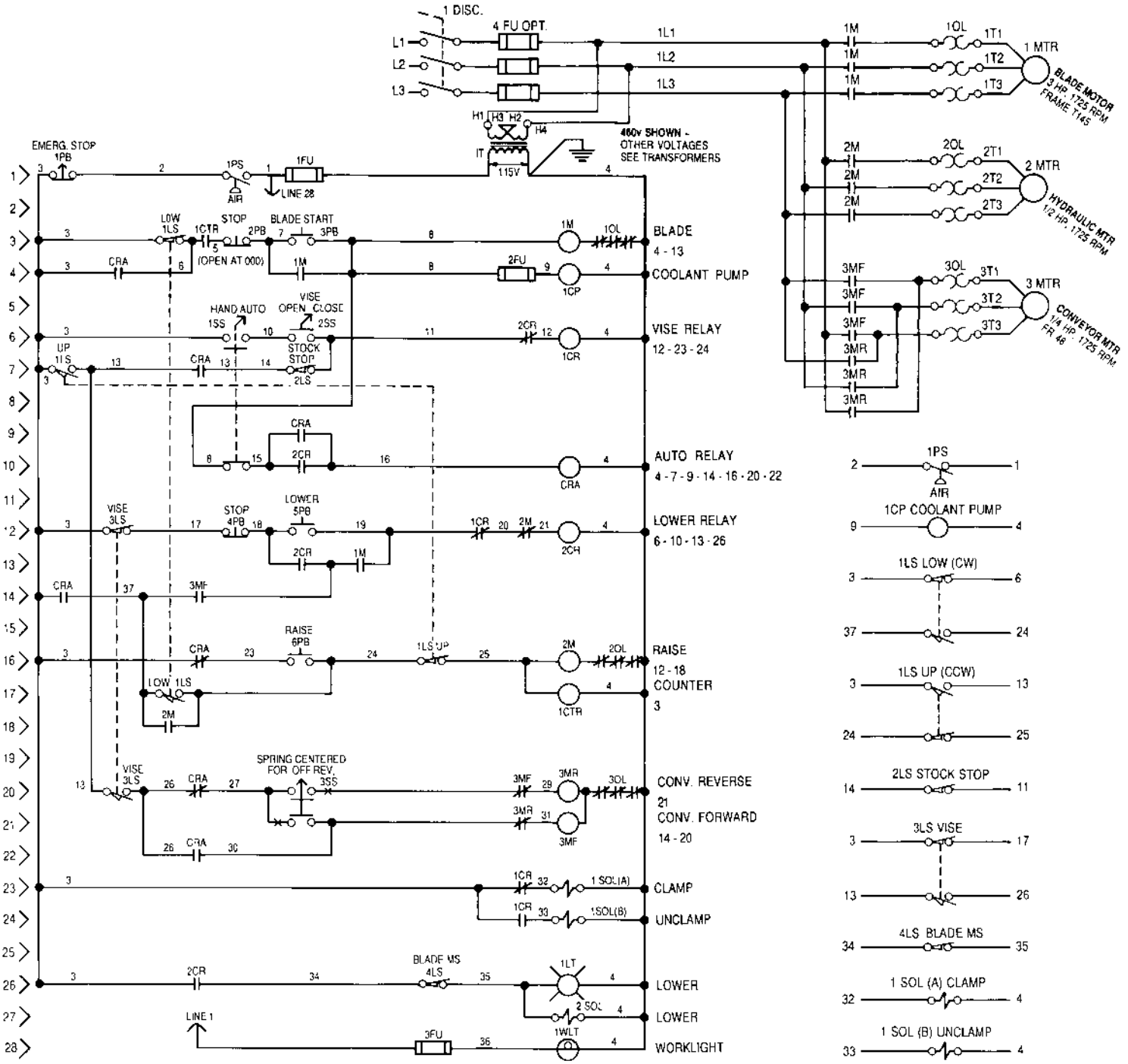

Wellsaw Model 1270A

3,5,6 PB	100696-018T	Push Button
2,4 PB	100696-017T	Push Button
1 PB	100696-014T	Push Button
4FU	100628-020	Fuse
3 FU	100628-014	Fuse
2 FU	100628-008	Fuse
1 FU	100628-013	Fuse
IT	100869-003	Transformer
CRA,1,2 CR	100746-028	Relay
1 CP	100249-003	Coolant Pump
3 M	100867-006	Magnetic Starter
1,2 M	100867-007	Magnetic Starter
1 WLT	100781-008	Work Light

1 DISC	100780-009	Disconnect
1 PS	100798-001	Pressure Switch
1 LT	100578-001	Lamp
2 SOL	100673-027	Solenoid Valve
1 SOL	100673-012	Solenoid Valve
3 LS	100782-010	Limit Switch
2,4 LS	100543	Limit Switch
1 LS	100782-006	Limit Switch
1 CTR	100797-007	Predetermined Counter
3 SS	100709-017	Selector Switch
2 SS	100709-014	Selector Switch
1 SS	100709-011	Selector Switch

Control Layout
1270 Automatic

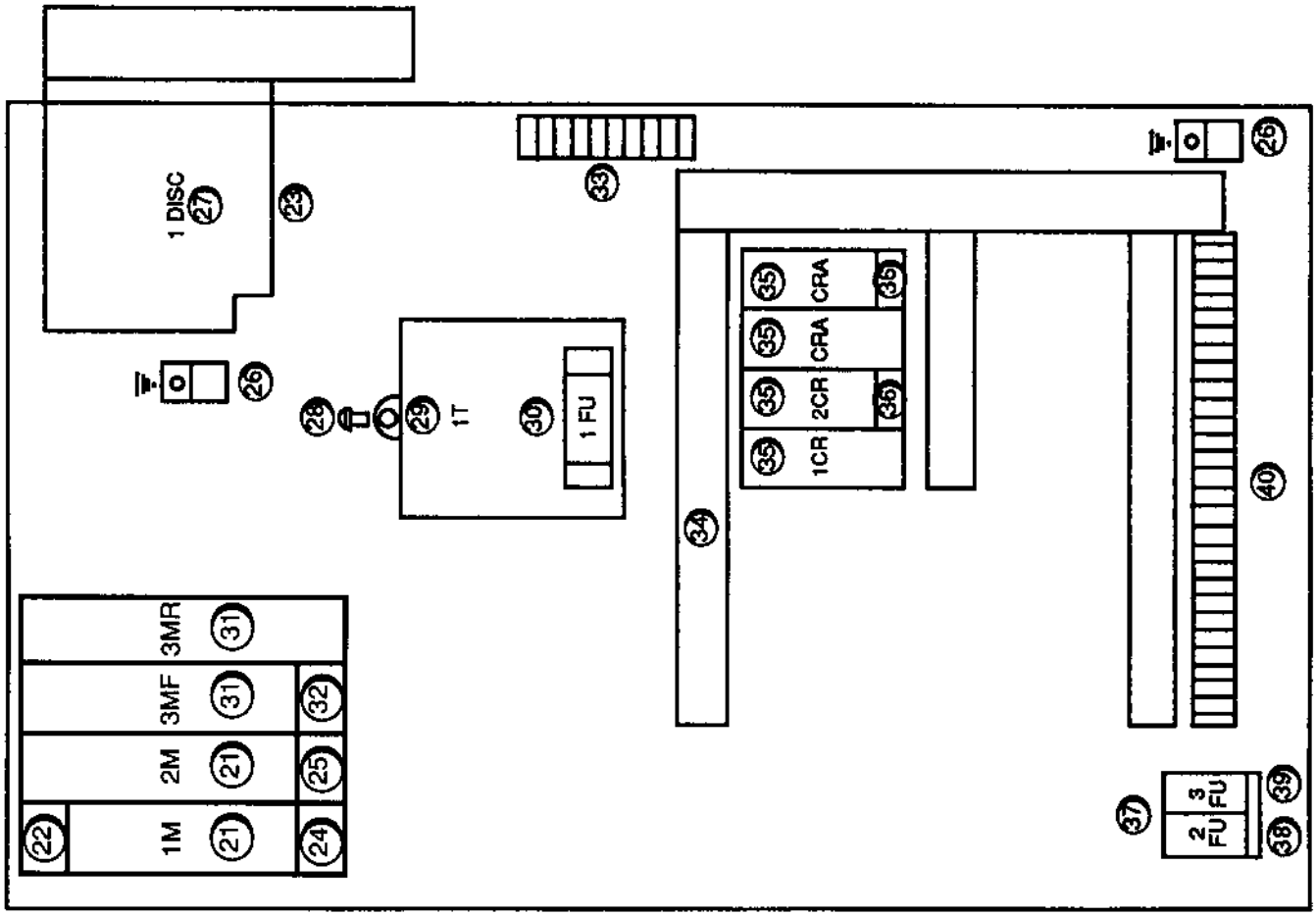

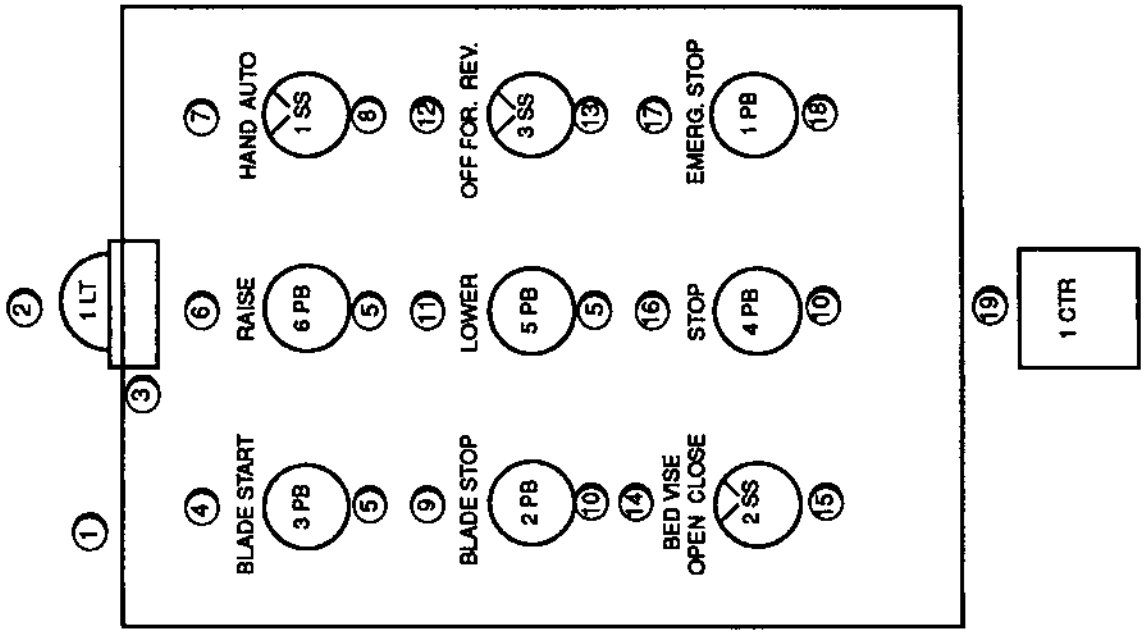

Control Layout 1270 Automatic

NOTE: IEC controls starting with SN 2183

1	106539-003	PUSH BUTTON PANEL
2	100577-004T	LENS, ORANG (USE W/1 LT)
3	100577-003T	BASE ASSY W/BULB, FRAME FEED LIGHT, 1 LT
	100577-005	REPLACEMENT BULB
4	100699-058	LEGEND PLAT (BLADE START)
5	100696-018T	PUSH BUTTON, BLADE START (3PB), LOWER (5PB), RAISE (6PB)
6	100699-056	LEGEND PLATE (BLADE RAISE)
7	100699-064	LEGEND PLATE (HAND/AUTO)
8	100709-011T	SELECTOR SWITCH, XB3-BD25 (1SS)
9	100699-027	LEGEND PLATE (BLADE STOP)
10	100696-017T	PUSH BUTTON BLADE STOP (2PB), FRAME STOP (4PB)
11	100699-057	LEGEND PLATE (BLADE LOWER)
12	100699-060	LEGEND PLATE (FOR OFF REV)
13	100709-017T	SELECTOR SWITCH, XB3-BD53 (3SS)
14	100699-065	LEGEND PLATE (BED VISE OPEN/CLOSE)
15	100709-011T	SELECTOR SWITCH, (2SS)
16	100699-012	LEGEND PLATE (STOP)
17	100699-013	LEGEND PLATE (EMERGENCY STOP)
18	100696-014T	PUSH BUTTON, EMERGENCY STOP (1 PB)
19	100797-007	PREDETERMINED COUNTER
20	100690-017	CONTOL BOX W/BACK PANEL
21	100867-007	MAGNETIC STARTER (1M + 2M)
22	100867-016	AUXILLARY CONTACTS
23	100628-020	FUSE, 15A (3 REQ'D)
24	100867-013	OVERLOAD (1M) MOTOR, 208-230V, 6.5-6.2A
	100867-012	OVERLOAD (1M) MOTOR, 230V, 3.1A
25	100867-009	OVERLOAD (2M) HYD, 208-230V, 2.1-2.0A
	100867-008	OVERLOAD (2M) HYD, 460V, 1.0A
26	100595-001	GROUND CLAMP
27	100780-009T	DISCONNECT, FLANGE MOUNTED (1 DISC)
28	100000-019	MACHINE SCREW, RD HD, 10-32 X 1/2
29	100629-003	TRANSFORMER, 500VA, 230-460 50/60 HZ (1 T)
30	100628-013	FUSE, FRN-5, TRANSFORMER (1 FU)
31	100867-006	REVERSING MAGNETIC STARTER W/CONTACTS (3MF, 3MR)
32	100867-009	OVERLOAD (3M) CONVEYOR, 208V, 1.4A, 230V, 1.3A
	100867-008	OVERLOAD (3M) CONVEYOR, 460V, .65A
33	100717-023	TERMINAL STRIP, 9 UNITS
34	100811	PANEL CHANNEL WITH COVER, 1 X 3 X 38"
35	100746-028	RELAY (CRA)
36	100746-029	AUXILLARY CONTACTS
37	100717-014	FUSE CLIP (2FU, 3 FU)
38	100628-008	FUSE, FNM-3, COOLANT PUMP (2FU)
39	100628-014	FUSE, FNM-1, WORKLIGHT (3FU)
40	100717-022	TERMINAL STRIP, 33 UNITS

Hydraulic Schematic
1270 Manual & Automatic

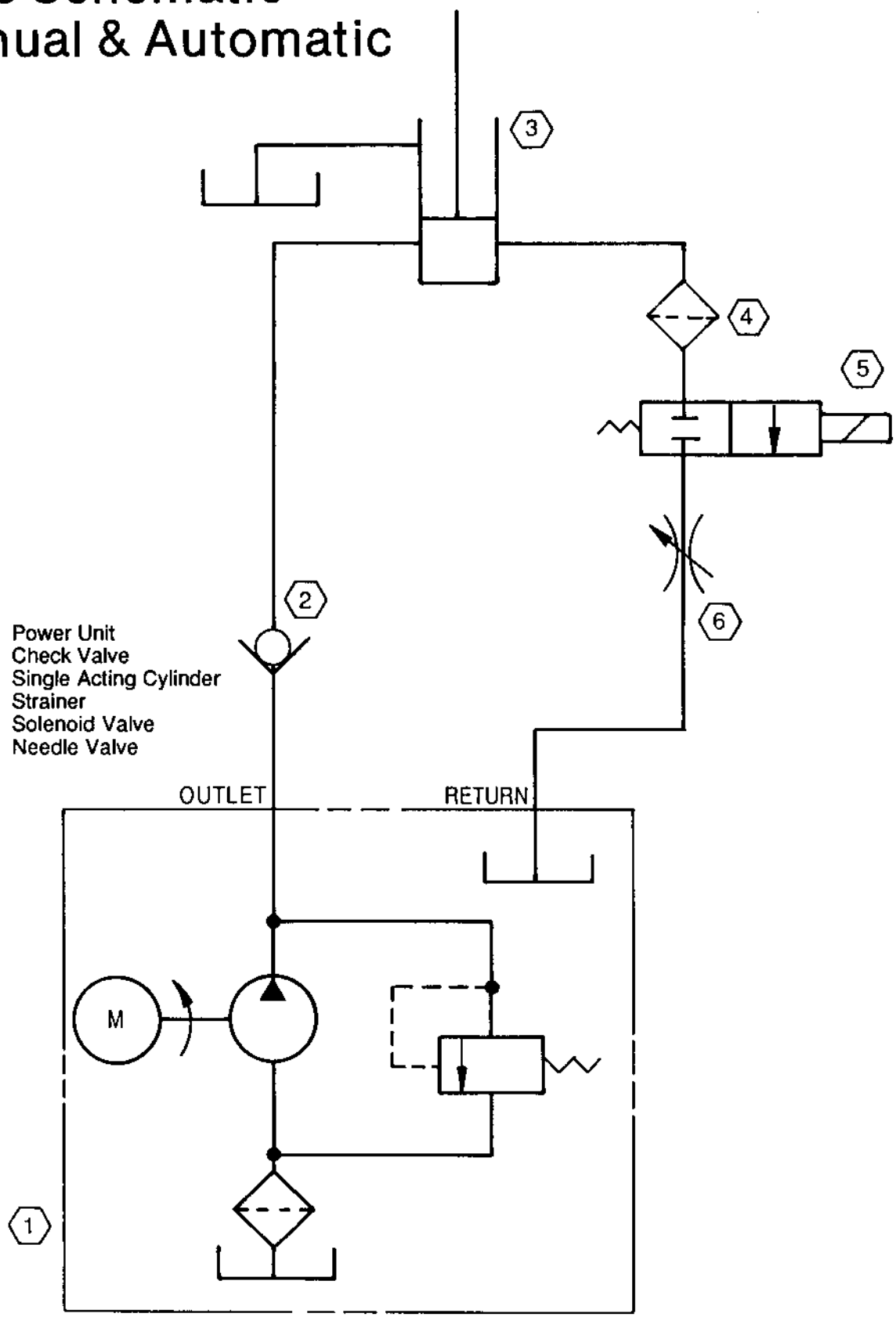

1	106649	Power Unit
2	100320-002	Check Valve
3	101903	Single Acting Cylinder
4	100237-002	Strainer
5	100673-027	Solenoid Valve
6	100238-002	Needle Valve

Pneumatic Schematic
Model 1270-A

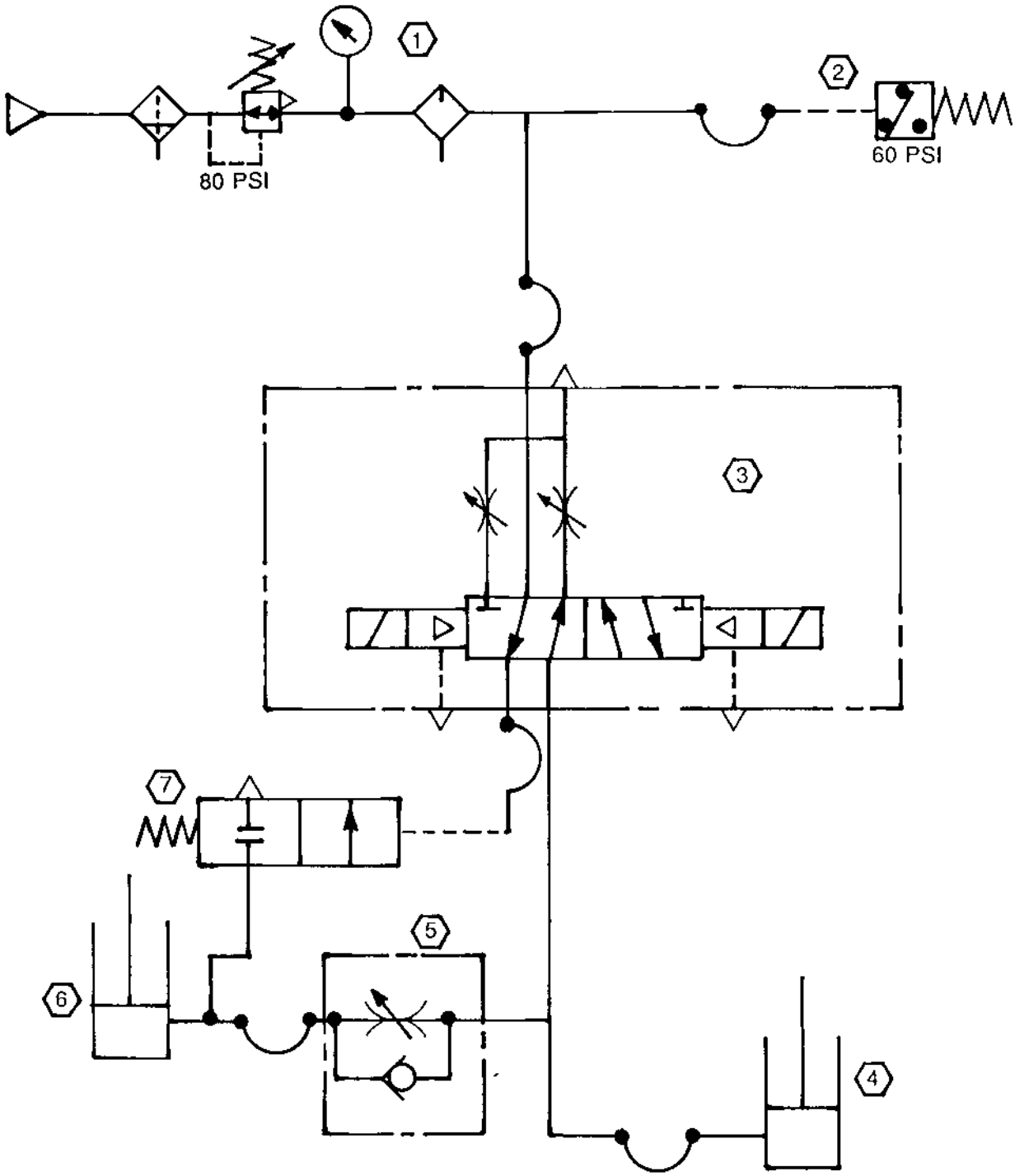

1	100259-001	Flt., Regular, Lub. & Gage
2	100798-001	Pressure Switch
3	100673-012	Solenoid Valve
4	102391	Vise & Cylinder Assembly
5	100286-001	Flow Control Valve
6	100299-014	Stock Stop Cylinder
7	100304-002	Pilot Operating Valve

Notes